CONTENTS

BREATHING APPARATUS SPARES

General Assembly Cen-paq **3**

GENERAL ASSEMBLY DIAGRAM & PARTS LIST. 3

AL-1 Centurion and Cen-paq **4**

CC-1 CN & Cen-Paq **5**

CV-4 . . . . . **6**

PARALLEL THREAD VALVES, LOCKING HANDWHEELS: 6

PG & WH-1 . . . . . **7**

Pressure Gauge, Whistle & Hose Assembly - Various 7

DV-3 . . . . . **8**

Positive Pressure Demand Valve and Hose Assembly 8

FM-1 PanaSeal and PanaVisor **10**

FM-1 PanaSeal and PanaVisor. 10

FM-3 Vision 3 . . . . . **12**

FM-7 - Promask Positive pressure **14**

RV-1 Centurion and Cen-Paq **16**

General Assembly Cen-paq

Item	Article	Part No	Description
GENERAL ASSEMBLY DIAGRAM & PARTS LIST			
1			See FM-1
2	1024023	038.207.02	Waistcoat, high visibility PVC Velcro fastening
	1024111	038.227.02	Waistcoat, black anti-static
3	1024038	038.210.01	Facemask pouch, high visibility PVC
	1024039	038.210.02	Facemask pouch, black anti-static
4			See DV-3
5			See PG&WH-1
6			See CC-1
7			See RV-1.
8			See CV-1

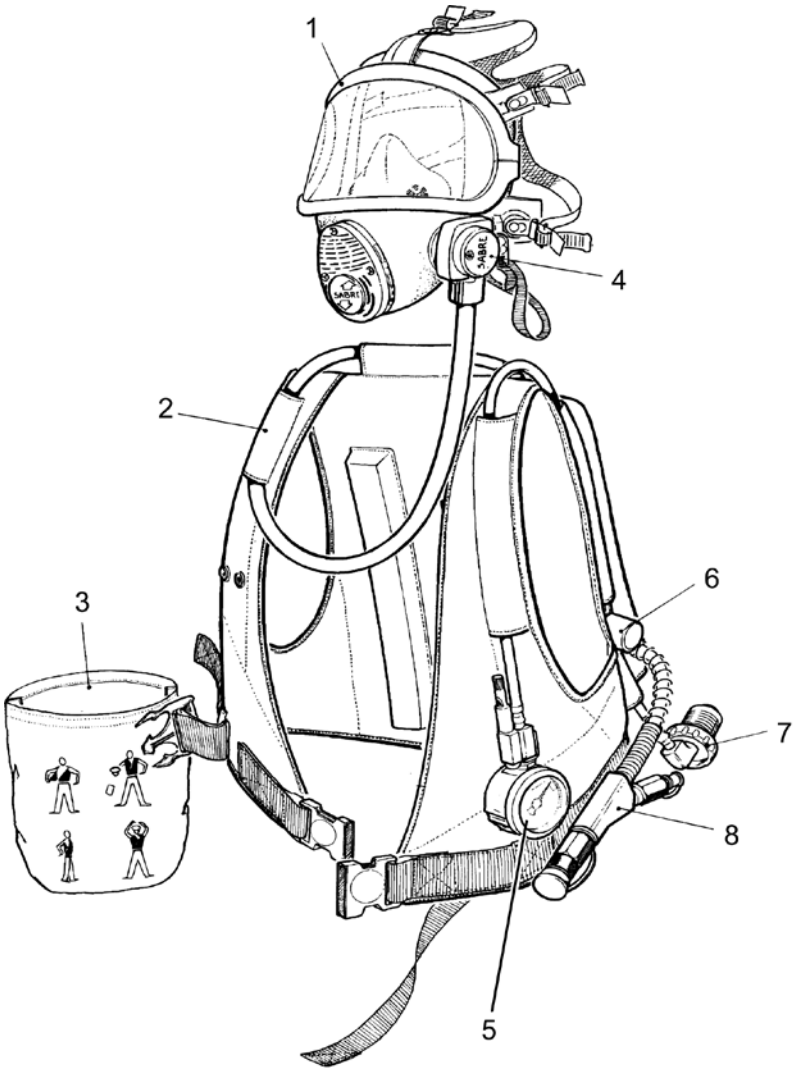

BREATHING APPARATUS SPARES

AL-1 Centurion and Cen-paq

Item	Article	Part No	Description
	1024978	039.184.99	Centurion, Cen-Paq, CEN Version: Part / Article Nos: 039.184.99 1024978
1	1033515	072.031.99	Dustcap, CEN plug
	1033538	072.054.99	Dustcap, Instantair plug
2	1019325	021.040.99	Plug connector, CEN
	1019279	021.003.99	Plug connector, Instantair
3	1022067	033.078.95	Adaptor body with filter and retainer
4	1022075	033.079.99	Filter and retainer, spares pack
5	1022077	033.080.99	Filter, spares pack (2)
6	1027877	054.045.49	O-ring, spares pack (5)
7	1031083	065.134.99	Non-return valve assembly c/w O-ring
8	1027987	054.107.99	O-ring, spares pack (5)
9	2020502		Coupling manifold (plastic)
10	1019328	021.041.99	CEN socket coupling
	1019277	021.002.99	Instantair socket coupling
11	1033542	072.056.99	Dustcap, CEN socket
	1033540	072.055.99	Dustcap, Instantair socket
12	1017800	014.040.99	U-clip, spares pack (5)
13	1027893	054.054.49	O-ring, spares pack (5)
14	1024689	039.089.92	Hose assembly c/w spiral protector and T-piece
15	1028422	057.083.99	Spiral hose protector
16	1018195	018.146.99	Mounting plate, screws and washers,spares pack, 2 of each
17	1021459	030.067.99	Screw, spares pack (5)
18	1021807	031.061.99	Lockwasher, spares pack (5)

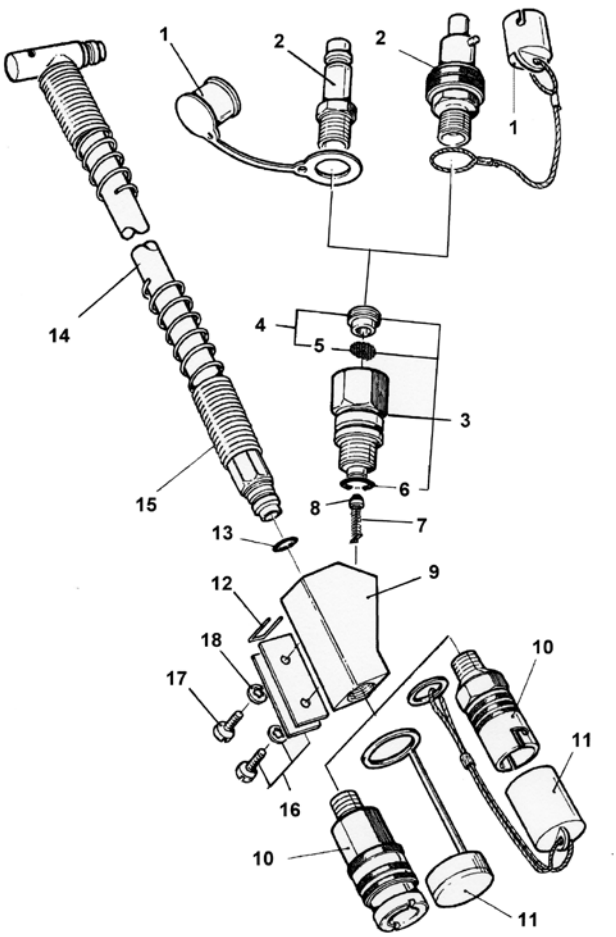

BREATHING APPARATUS SPARES

CC-1 CN & Cen-Paq

Item	Article	Part No	Description
	1024841	039.140.99	CENTURION & CEN-PAQ: Part/Article Nos: 039.140.99
	1025326	039.323.99	CENTURION-DUO, 1860 Short: Part/article Nos: 039.323.99
		039.321.99	CENTURION-DUO, 1800 Short: Part/Article Nos: 039.321.99
		039.309.98	CENTURION-DUO, Long: Part/Article Nos: 039.309.98
1	1027857	054.039.49	Connector O-ring, spares pack (5)
2	1018171	018.139.99	Connector liner (Older models, no inlet filter)
	2004231	018.307.99	Connector liner (Newer models with inlet filter)
3	1027893	054.054.49	O-ring, spares pack (5)
4	1018179	018.141.99	Handwheel, connector and O-rings
	1018177	018.141.97	Handwheel, connector O-rings and filter
5	1022064	033.077.99	Sintered filter (internal), spares pack (2)
6	1017803	014.041.99	U-Clip, spares pack (5)
7	1018165	018.138.99	Elbow & filter, spares pack
8	1027986	054.107.49	O-ring, spares pack (5)
9	1024824	039.137.99	High pressure hose, Centurion, Cen-Paq
	1025324	039.322.99	High pressure hose, Centurion-Duo, 1860 short
	1025318	039.320.99	High pressure hose, Centurion-Duo, 1800 short
	1025305	039.311.99	High pressure hose, Centurion-Duo, long both types
10	1022087	033.084.99	Sintered filter (external), spares pack (2) (Not on older versions)
11		031.136.99	Spring washer for handwheel, pack (5), fitted to DUO hoses only (not illustrated)

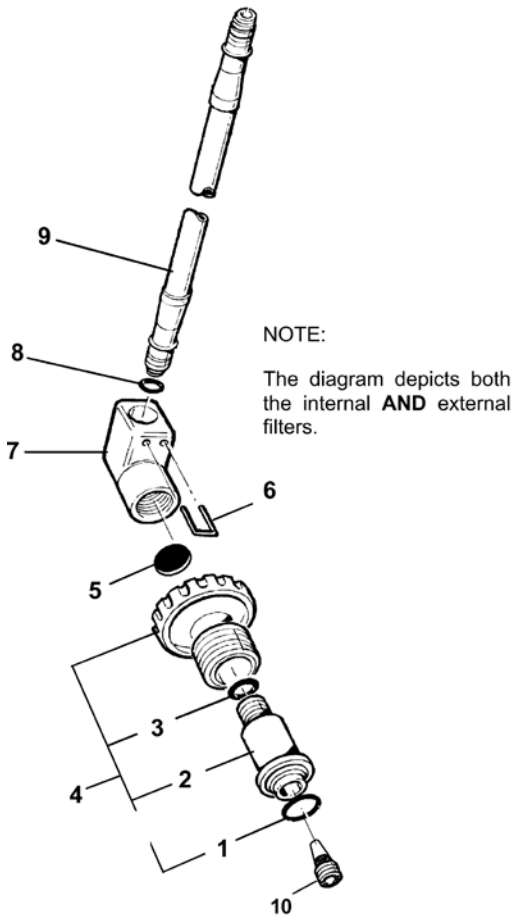

BREATHING APPARATUS SPARES

CV-4

Item	Article	Part No	Description
PARALLEL THREAD VALVES, LOCKING HANDWHEELS:			
	1031287	065.261.99	207 bar, M18 x 1.5 Parallel Thread: Part /Article Nos: 065.261.99
	1031286	065.261.98	310 bar, M18 x 1.5 Parallel Thread: Part /Article Nos: 065.261.98
1	1023639	037.022.98	Handwheel, spares pack, comprising items 2 to 7.
2	1033587	072.095.99	Blank plug (5)
3	1021296	029.014.99	Nut, spares pack (5)
4	1021759	031.024.99	Washer, spares pack (5)
5		N/A	Cup cradle
6		N/A	Handwheel
7	1023646	037.024.97	Collar
8	1028435	057.095.99	Spring
9		065.265.99	Gland nut with O-rings fitted and lubricated
10		065.264.99	Spindle, with O-ring and backing ring fitted and lubricated
11		065.263.99	Seat assembly, spares pack (2)
12	1023631	037.017.99	Rubber buffer
13		N/A	Valve body
14		031.175.99	Spindle assembly service kit, nut, washer, seat, O-rings, thrust washer, 2 of each
15	1028161	054.222.99	O-ring for M18 cylinder valves, spares pack (5)
16	2015986	2015986	New internals for CV-4, consisting of New gland nut, new spindle and new sets and all associated seals. This kit replaces items 9,10 and 11 and 14. It contains the parts to replace the internals of 1 valve.

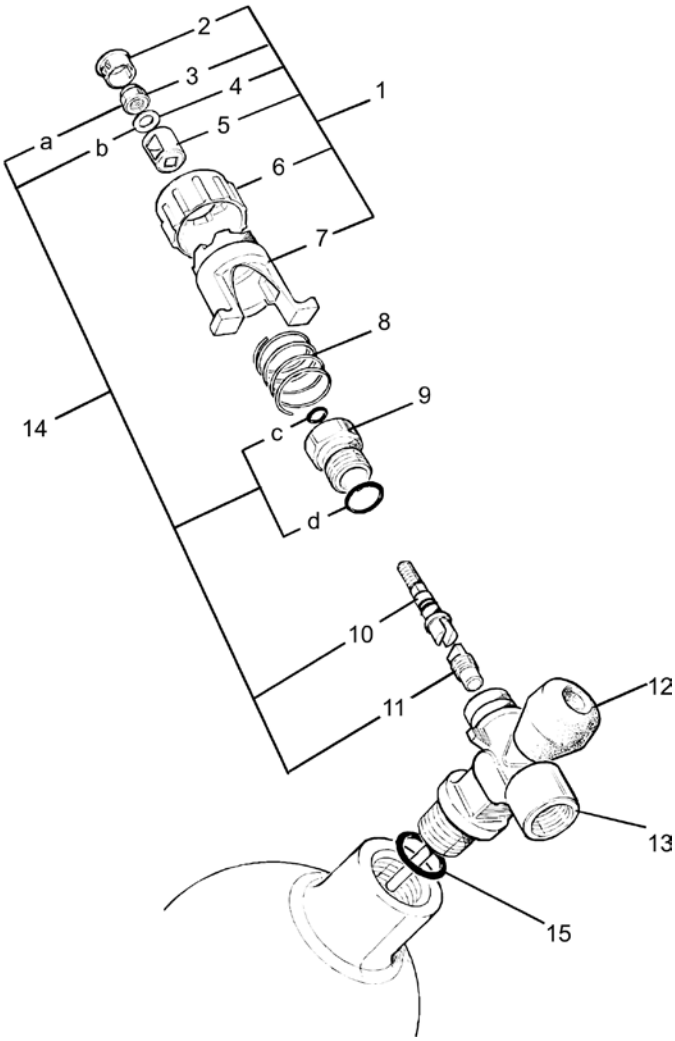

BREATHING APPARATUS SPARES

PG & WH-1

Item	Article	Part No	Description
Pressure Gauge, Whistle & Hose Assembly - Various			
	2020327	035.119.89	Contour & Pro-Pak 55 bar: 1023311: 035.119.89
	1023318	035.119.98	Centurion 44 bar: 1023318: 035.119.98
	1023317	035.119.97	Centurion 55 bar: 1023317: 035.119.97
	1023319	035.119.99	Centurion 68 bar: 1023319: 035.119.99
	1023319	035.119.99	Cen-Paq 68 bar: 1023319: 035.119.99
	2020327	035.119.96	Sigma 2 55 bar: 1023316: 035.119.96
1	1023193	035.080.99	Pressure gauge, shroud and crush seal
2	1027937	054.068.99	Crush seal, spares pack (5)
3	1023210	035.085.98	Whistle assembly, 44 bar including items: 2, 4, 5, 7, 8, 9 & 10
	1023209	035.085.97	Whistle assembly, 55 bar including items: 2, 4, 5, 7, 8, 9 & 10
	1023211	035.085.99	Whistle assembly, 68 bar including items: 2, 4, 5, 7, 8, 9 & 10
4	1023234	035.091.98	Whistle piston and seals, 44 bar
	1023232	035.091.95	Whistle piston and seals, 55 bar
	1023235	035.091.99	Whistle piston and seals, 68 bar
5	1023242	035.096.99	Blank plug and O-ring
6	1027893	054.054.49	O-ring, spares pack (5)
7	1028049	054.132.99	Whistle seal, spares pack (5)
8	1023216	035.087.99	Whistle body only
9	1023239	035.094.99	Locknut, spares pack (2)
10	1023220	035.088.99	Whistle flute and plug
11	1017796	014.039.99	Whistle clip, spares pack (2)
12	1021905	031.134.99	Nylon washer, spares pack (5)
13	1027986	054.107.49	O-ring, spares pack (5)
14	2016205	039.136.95	Hose assembly, Contour / Pro-Pak / Sigma 2
	1024821	039.136.99	Hose assembly, Centurion / Cen-Paq
	2016205	039.136.98	Hose assembly, Sigma, Sigma- Paq
15	1023390	035.171.99	Pressure gauge only
16	1023392	035.172.99	Gauge shroud only
17		035.183.99	Bung for pressure gauge (2)

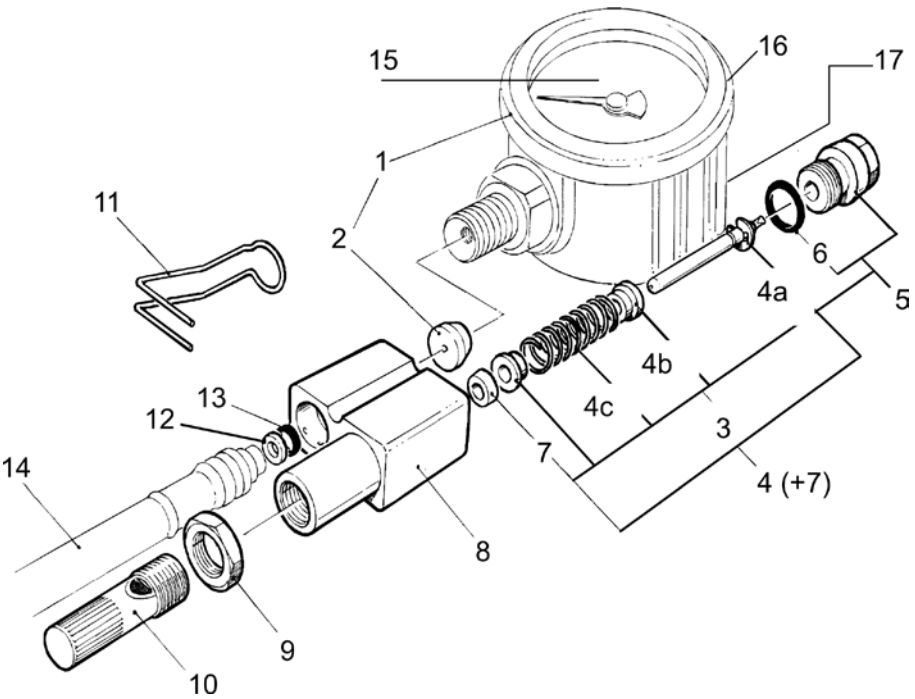

BREATHING APPARATUS SPARES

DV-3

Item	Article	Part No	Description
Positive Pressure Demand Valve and Hose Assembly			
	1028915	060.183.99	Centurion, Cen-Paq DV and Hose - 060.183.99
	1028914	060.183.98	Centair, RAS DV and Hose 060.183.98
	1029102	060.300.99	Contour, Pro-Pak DV and Hose - 060.300.99
	1029098	060.300.95	Contour, Pro-Pak DV and Split Upper Hose - 060.300.95 (SDC)
	2008722	2008722	Sigma-2, FB DV - 2008722
	1029090	060.300.11	M45 DV and hose
		060.300.92	M45 split DV and hose
1	1027409	049.805.99	Label ‘Positive Pressure’ spares pack (5)
2	1029112	060.302.99	Demand valve cover
3	2004032	060.163.99	Main diaphragm
4	1028416	057.080.99	Bias spring, spares pack (5)
5	1029105	060.301.99	Demand valve body and pilot jet assembly
5a	1029056	060.239.01	Demand valve body with pilot jet for M45 Demand valve
6	2004033	054.111.29	O-ring, spares pack (5)
7	1021536	030.116.99	Tamperproof screws, spares pack (5)
8	1028982	060.206.99	Catch and spring spares pack
9		NA	Catch spring spares pack (5)
10	1024837	039.139.99	Hose Centurion, Cen-Paq
	1024930	039.176.99	Hose Centair, RAS
	1024834	039.139.94	Hose Contour, Pro-Pak
	1024836	039.139.97	Hose CTR Sigma
10a	1025274	039.279.99	Upper hose (less DV) for Contour/Propak SDC
	1025272	039.278.99	Lower hose for Contour/Propak SDC
11	2004034	054.054.29	O-ring, spares pack (5)
12	1017800	014.040.99	U-clip, spares pack (5)
13	1028856	060.168.99	Valve disc, spares pack (2)
14	1029051	060.235.99	Bypass knob
15	2004035	060.186.99	Inlet stem assembly, c/w O-rings, filter and assembly aid
15a	1027830	054.012.49	Bypass O-ring (x2), spares pack (5)
15b		N/A	Gauze filter
15c		N/A	Assembly aid (Tool ref: (G))
16	1028043	054.128.29	O-ring, spares pack (5)
17	1028880	060.182.99	Reset button, spares pack (2)
18	2004036	060.449.00	FBM service kit, comprising items 17, 18 and 19
18a	1029171	060.444.99	Retainer disc for FBM, spares pack (5)
18b	1029173	060.445.99	Secondary diaphragm, spares pack (5)
18c		N/A	Saddle and plunger (Part of 18)
18d		N/A	First breath latch spring (Part of 18)
19a		N/A	Plunger spring
19b		N/A	Plunger
20	2009624	072.059.00	Protective cap for DV outlet (Not illustrated)
21	1029179	060.451.99	Tempest Body and cover with first breath fitted and tested

DV-3

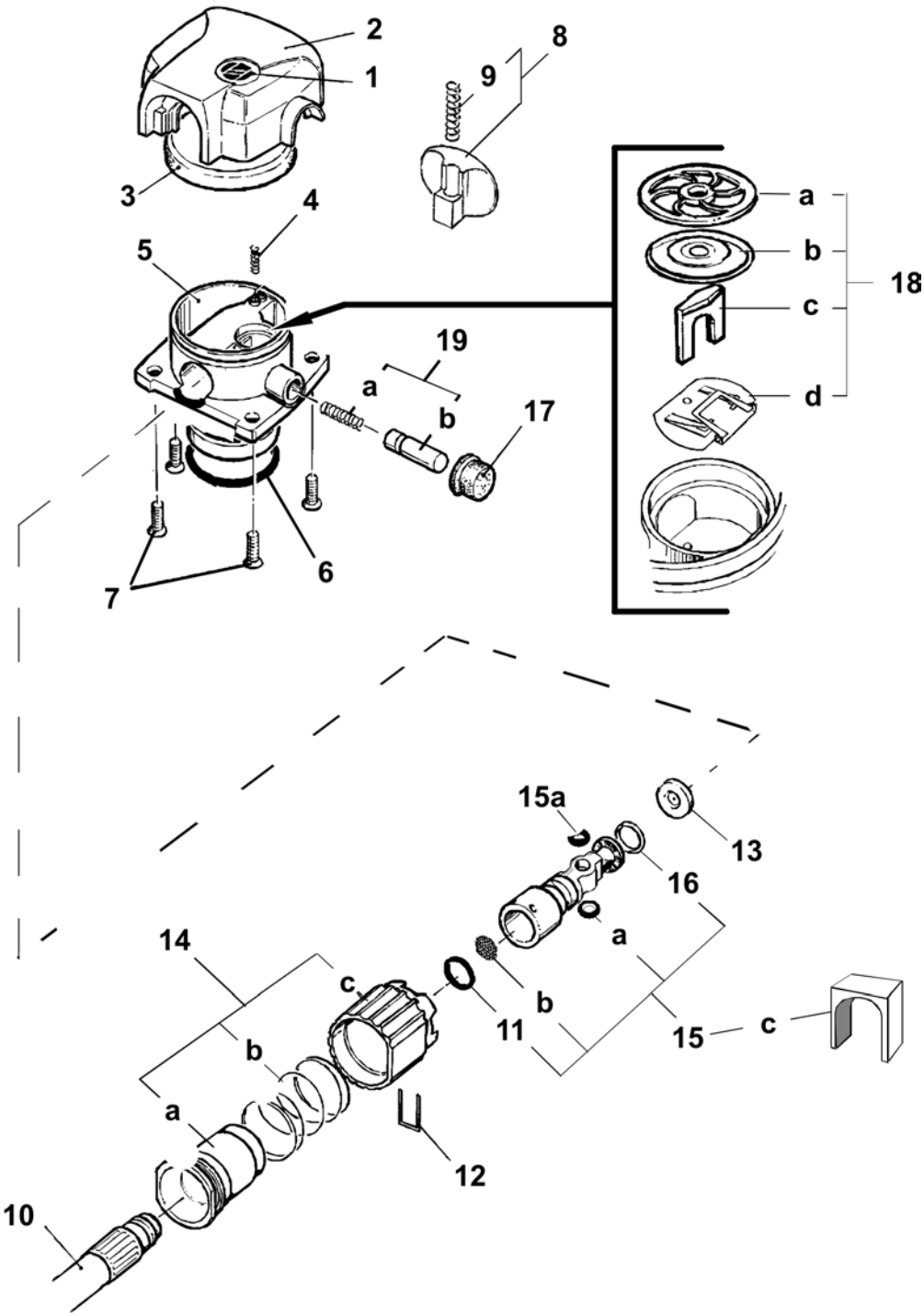

BREATHING APPARATUS SPARES

FM-1 PanaSeal and PanaVisor

Item	Article	Part No	Description
FM-1 PanaSeal and PanaVisor			
1	1031708	071.102.99	Visor (coated) and Visorguard
	1031701	071.102.92	Visor (uncoated) and Visorguard
	2006686	2006686	VisorGuard (5)
	2004441	071.151.99	Clear visor covers spares pack (20)
2	2003415	071.105.99	Clamps and screws for visor
3	1021482	030.080.99	Screws, front cover, spares pack (5)
4	1032238	071.253.99	Front cover and screws, spares pack
5	1027929	054.066.99	O-ring, exhale valve, spares pack (5)
6	2004044	071.213.99	Exhale valve c/w O-ring
7	2001322	054.067.99	O-ring, speech diaphragm, spares pack (5)
8	2003437	071.211.99	Speech diaphragm c/w O-ring
9	2022726	2022726	Inner mask valve flaps, spares pack (6) - Black inbuilt pin style
10a	2004439	071.115.98	Inner mask valve pins, spares pack (6) (Neoprene masks)
10b	1031727	071.110.99	Inner mask valve frame, spares pack (2) (Silicone masks)
11	1032063	071.203.99	Inner mask clamp plate
12	1021457	030.065.99	Screws, clamp plate, spares pack (5)
13	1032460	071.314.99	Front fitting assembly, Neoprene, c/w speech diaphragm, inner mask, exhale valve, front cover & screws
		071.351.99	Front fitting assembly, silicone, c/w speech diaphragm, inner mask, exhale valve, front cover & screws
14	2003666	014.038.97	Front fitting clamp, spares pack (5)
15	1032412	071.303.99	Outer mask assembly, Neoprene, c/w visor, clamps, side fitting, deflector & Visorguard
		071.352.99	Outer mask assembly, silicone, c/w visor, clamps, side fitting, deflector & Visorguard
	2008624	071.200.01	Outer mask only, LQF mask, Neoprene
	1031985	071.200.03	Outer mask only, LQF/REQF mask, Neoprene
	1031991	071.200.09	Outer mask only, silicone
16	1017794	014.038.99	Side fitting clamp, spares pack (5)
17	1032379	071.298.99	Side fitting including deflector
18	1032334	071.270.99	Head harness button, spares pack (7)
19	2003433	071.126.99	Neck strap assembly (not used on 071.304.01)
20	1017260	008.017.99	Head harness buckles, spares pack (5)
21a	2004440	071.120.98	Head harness, Neoprene
21b	1033315	071.793.99	Head harness, Net
22	1032384	071.299.99	Deflector for side fitting
23a	1032043	071.201.95	Inner mask, silicone, c/w valve flaps and pins (not indicated)
23b	1032046	071.201.99	Inner mask, Neoprene, c/w valve flaps and pins (not indicated)
24	1032397	071.302.99	Support for front fitting, spares pack (5)
25	Part of item 13		Front fitting

FM-1 PanaSeal and PanaVisor

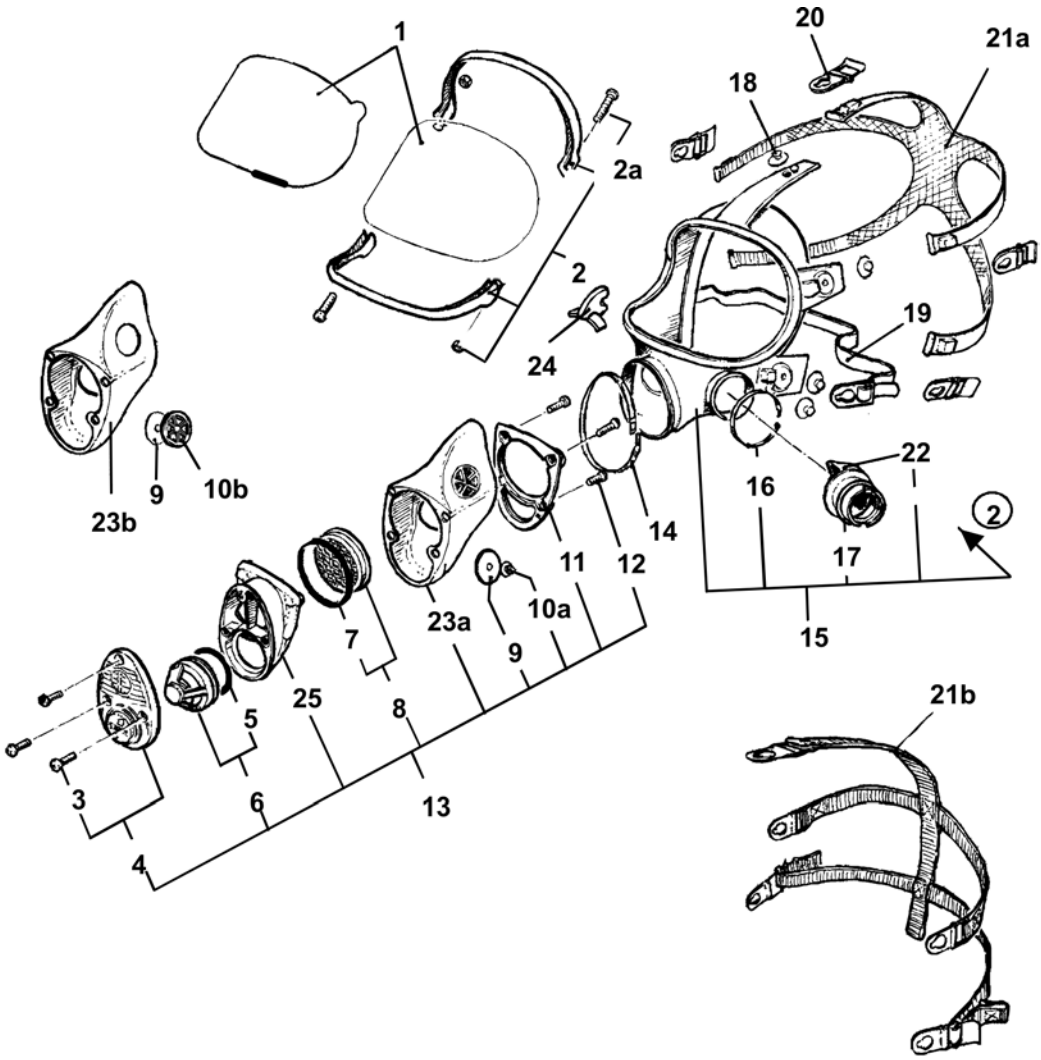

BREATHING APPARATUS SPARES

FM-3 Vision 3

Item	Article	Part No	Description
	1071671	VISION 3 PP LQF	Vision 3 LQF Positive Pressure Facemask Std HH
	1071674	VISION 3 PP RQF	Vision 3 RQF Positive Pressure Facemask Std HH
	2001746	2001746	Vision 3 LQF/40mm Positive Pressure Facemask Std HH
1	1021425	030.040.99	Screws spares pack (5) screws
2	1033166	071.727.99	Front cover assembly
3a	1033172	071.730.99	Visor LQF coated assembly
3b	2006351	2006351	Visor LQF/REQF coated assembly
3c	2014834	071.834.99	Visor LQF/RAS coated assembly
4	2015349	071.213.95	Exhale valve c/w O-ring
5	1028183	054.235.99	O-ring (Pack of of 5)
6	1033085	071.695.99	Front fitting
7	1028183	054.235.99	O-ring (Pack of of 5)
8	2003437	071.211.99	Speech diaphragm c/w O-ring
9	2001322	054.067.99	O-ring, speech diaphragm (Pack of 5)
10	1033079	071.694.99	Speech diaphragm retainer
11	1033101	071.702.99	Face seal M/L
	1074391	071.868.99	Faceseal Small
	2015513	2015513	Faceseal Asian
12	1033124	071.707.99	Buckle and roller (Pack of 5)
13a	1033109	071.704.99	Rubber head harness
13b	1033400	071.838.99	Net head harness, Polyester
14	1033220	071.751.99	Stirup, rubber link and button
15	1033138	071.712.99	Inner mask c/w inhale valves M/L
	1074399	071.875.99	Inner mask c/w inhale valves Small
16	2022726	2022726	Inner mask valve flaps, spares pack (6) - Black inbuilt pin style
16a	2009563	2009563	Orinasal Valve Pin (Pack of 6)
17	1033128	071.708.99	Hinge (Pack of 3 hinges and 2 lower hinges)
18	1033133	071.710.99	Clamps and screws for visor, spares kit
19	1033178	071.733.99	Neckstrap, mount and pin
20	1033128	071.708.99	Hinge, lower
21	2008835	2008835	Gauze Baffle (5)

BREATHING APPARATUS SPARES

FM-3 Vision 3

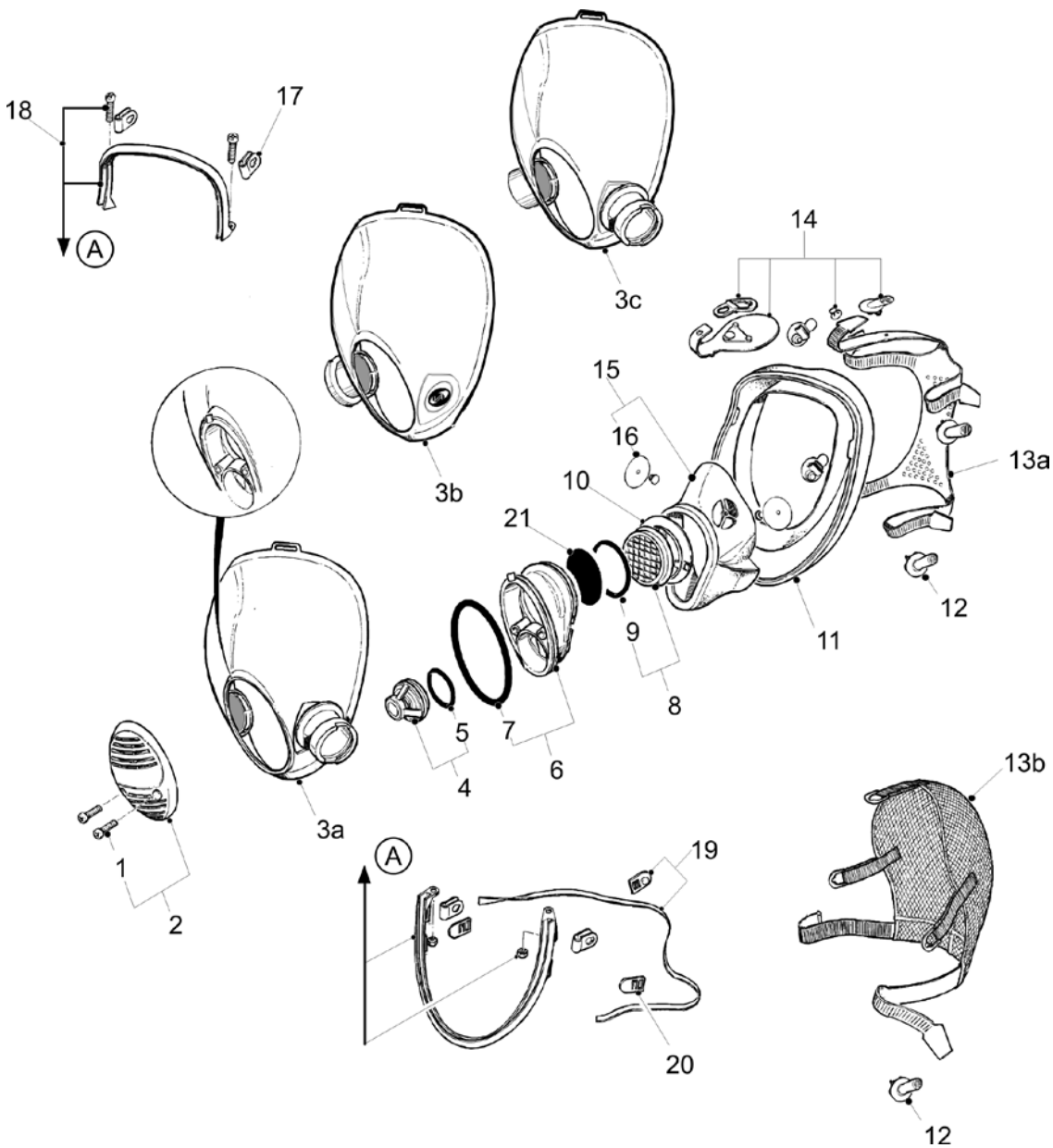

FM-7 - Promask Positive pressure

Item	Article	Part No	Description
1	5512974	5512974	Front Cover & Screws
2	5513315	5013315	Screw (10)
3	5512996	5012996	Speech Channel Body
4	5512687	5012687	Speech Diaphragm
5	N/A	N/A	O-Ring
6	5513320	5013320	Exhale Valve Cover
7	2004044	071.213.99	Exhale Valve Assy
8	1027929	054.066.99	O-Ring (5)
9	5513321	5013321	Outer Mask Assy (Small)
9	5513322	5013322	Outer Mask Assy (Medium/Large)
10	N/A	N/A	Clamping Ring
11	N/A	N/A	Serrated Ring
12	N/A	N/A	Adaptor
13	N/A	N/A	O-Ring
14	N/A	N/A	Valve Housing
15	5512695	5012695	Polycarbonate Visor - Uncoated
15	5512795	5012795	Polycarbonate Visor - Hard Coated
16	5513317	5013317	Visor Frame & Screws
17	5512691	5012691	Inner Mask & Ring
18	N/A	N/A	Retaining Ring
19	5512773	5012773	Valve Frame (2)
20	5513325	5013325	Valve Flap (6)
21	5512692	5012692	Standard Headharness
21	5513316	5013316	Net Headharness - Kevlar
21	5512775	5012775	Net Headharness - Polyester
22	5512694	5012694	Buckle & Roller (5)
23	1033178	071.733.99	Neck-strap Assembly
24	2009562	071.717.99	Mounting (2)
25	5513319	5013319	LQF Port
26	5513326	5013326	Slide Ring
27	5513327	5013327	Locking Ring
28	5513328	5013328	Blanking Port
29	5513319	5013319	RQF Port
30	5513324	5013324	Comms Port
31	5513323	5013323	DIN 40 Port Assembly
32	5513325	5013325	Valve Flap (6)
33	5512772	5012772	Valve Frame (2)
34	5512777	5012777	Blanking Plug
35	5513329	5013329	Drinking Device Kit
36	5512790	5012790	Spectacle Frame
37	5512658	5012658	Spark Guard for speech diaphragm

FM-7 - Promask Positive pressure

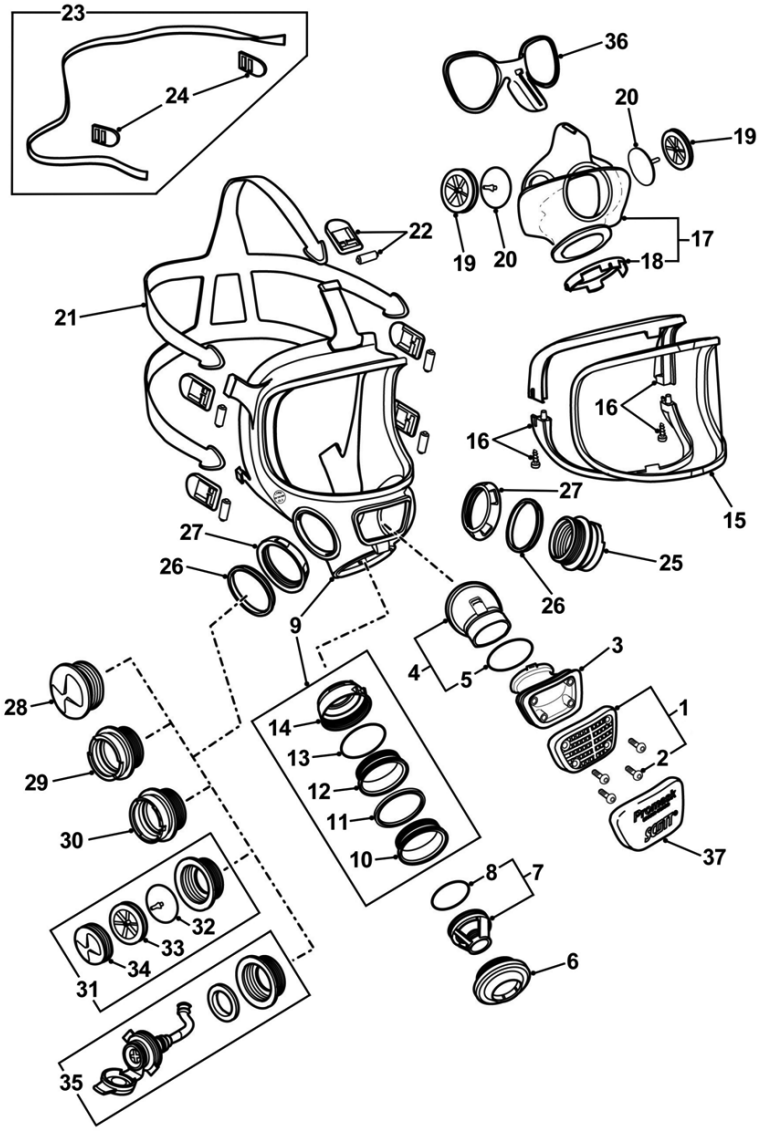

BREATHING APPARATUS SPARES

RV-1 Centurion and Cen-Paq

Item	Article	Part No	Description
	1029404	061.130.99	CENTURION & CEN-PAQ: Part /Article Nos:061.130.99
1	1029704	061.241.99	Reducer cap
2	1029414	061.133.99	Piston and O-rings assembly
3	1029421	061.135.99	Piston seat, spares pack (5)
4a	1028013	054.115.29	Piston O-rings, large, spares pack (5)
4b	1027797	054.007.29	Piston O-rings, small, spares pack (5)
5		061.133.98	Piston and seat assembly
6	1028418	057.081.99	Reducer spring
7	1029447	061.138.99	Reducer valve body
8	2004034	054.054.29	O-ring, spares pack (5)
9	1027986	054.107.49	O-ring, spares pack (5)
10	1030903	064.018.99	Pressure relief valve
11	1017800	014.040.99	U-clip, medium pressure, spares pack (5)
12	1017803	014.041.99	U-clip, high pressure, spares pack (5)
13	1029425	061.136.99	Cover plate and screws, spares pack
14	1021536	030.116.99	Screws, tamperproof, spares pack (5)
15	1021822	031.071.99	Reducer mounting kit, Centurion, includes block, pads, screws etc.
		031.054.98	Reducer mounting kit, Centurion-LT & Cen-Paq, includes block, pads, screws etc.
16	1021893	031.123.99	Screw pad

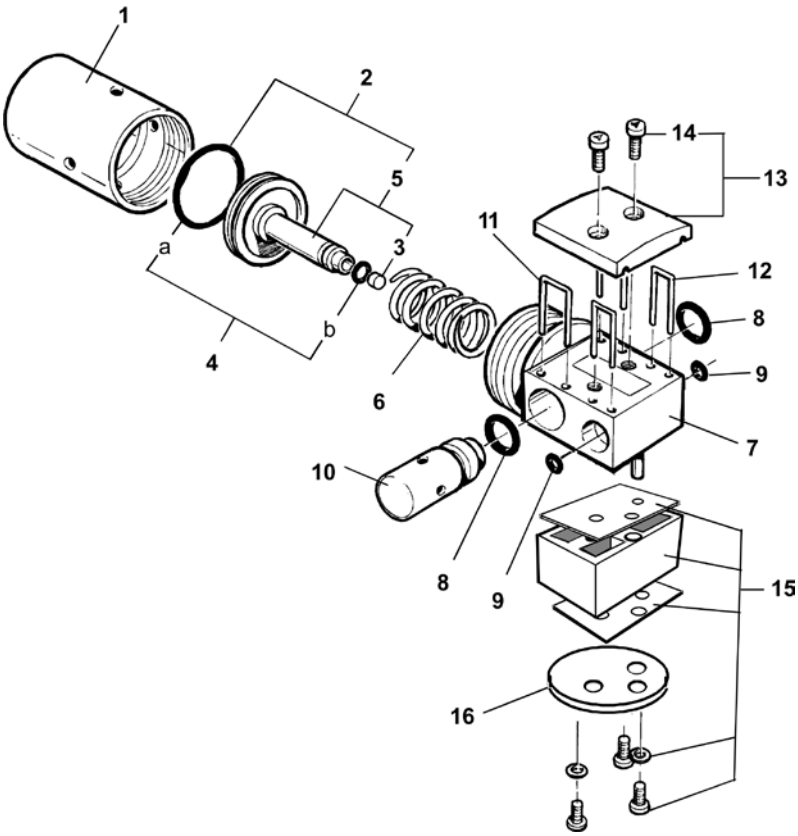

Thank you for reading this data sheet.

For pricing or for further information, please contact us at our UK Office, using the details below.

UK Office
Keison Products,
P.O. Box 2124, Chelmsford, Essex, CM1 3UP, England.
Tel: +44 (0)330 088 0560
Fax: +44 (0)1245 808399
Email: sales@keison.co.uk

Please note - Product designs and specifications are subject to change without notice. The user is responsible for determining the suitability of this product.