JENWAY

Flame Photometer
Models PFP7 and PFP7/C

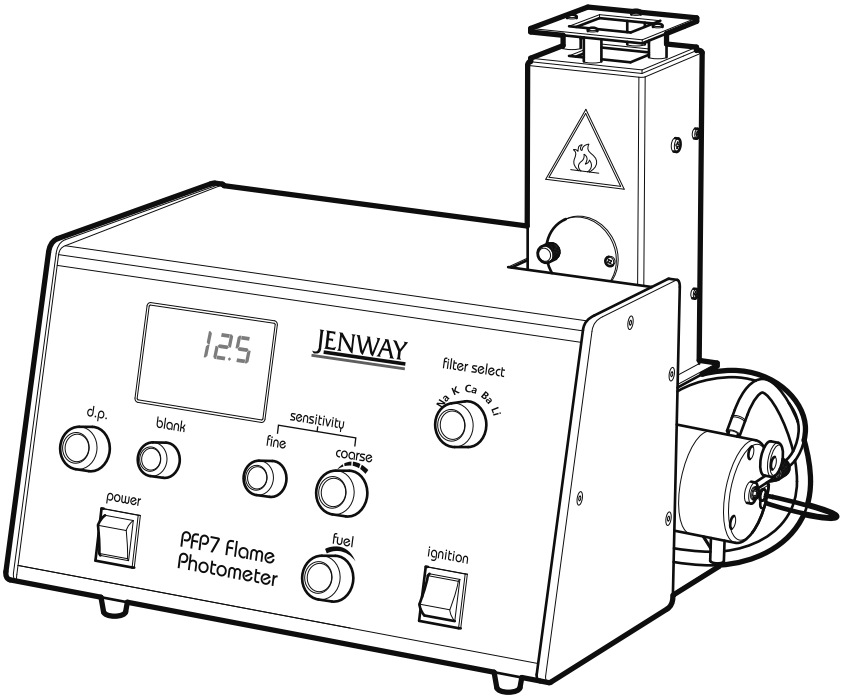

Instruction Manual

500 795/REV E/03-17

Cole-Parmer®

English

Safety Information

Please read this information carefully prior to installing or using this equipment.

1. The unit described in this manual is designed be operated only by trained personnel. Any adjustments, maintenance and repair must be carried out as defined in this manual, by a person qualified to be aware of the hazards involved.
2. It is essential that both operating and service personnel employ a safe system of work, in addition to the detailed instructions specified in this manual.
3. Other than for those items defined in the maintenance procedures herein there are no user serviceable items in this instrument. Removal of covers and attempted adjustment or service by unqualified personnel will invalidate the warranty and may incur additional charges for repair.
4. References should always be made to the Health and Safety data supplied with any chemicals used. Generally accepted laboratory procedures for safe handling of chemicals should be employed.
5. If it is suspected that safety of the unit has been impaired in any way, the unit must be made inoperative and secured against any intended operation. The fault condition should immediately be reported to the appropriate servicing authority.

NOTE: Failure to use this equipment in accordance with the manufacture's manual may compromise your basic safety protection afforded by the equipment and may invalidate the warranty. The warranty does not cover damage caused by faulty installation or misuse of the equipment.

Prevention of Fire and Electric Shock.

To prevent a risk of fire or electric shock, **DO NOT** open your product case without authorisation. Only qualified service personnel should attempt to repair this product.

Replace fuses only with the type as listed in section 4.1.2.

Ensure the mains power supply conforms to the rating found on the serial plate located on the back of this product.

Never operate this equipment without connection to earth / ground. Ensure the mains supply voltage is correctly earthed / grounded in accordance with current area legislation.

General Safe Operating Practice

Always follow good laboratory practice when using this equipment. Give due recognition to your company's safety and legislative health & safety procedures and all associated legislation applicable to your areas of operation. Check laboratory procedures for substances being used and ensure all hazards (e.g. explosion, implosion or the release of toxic or flammable gases) that might arise have been suitably addressed before proceeding. When using certain

substances the liberation of hazardous gases may require the use of a fume cupboard or other means of extraction.

Be aware of biological contamination. Ensure sterilization of the capillary tube, waste, nebuliser and mixing chamber is performed after contamination.

Ensure equipment is used on a clean, dry, non-combustible, solid work surface with at least 300mm suitable clearance all around and at least 1m clearance above the chimney.

Ensure that the outer chimney is properly installed before operating the equipment.

Attention: Ensure that the gas and air pipes have been connected correctly and that there are **no gas leaks** present before igniting.

Ensure that the unit is properly connected to the gas cylinder making sure there are no gas leaks. Ensure that the correct gas regulator is used and connected properly. The responsible body must ensure that the type of connector used on the outlet of the gas-pressure regulator conforms to the applicable national requirements.

Take care when fitting and removing the capillary tube to the nebulizer needle.

It is not recommended to leave the flame photometer unattended during operation.

Do not operate or handle any part of the product with wet hands.

Do not look down the flame chimney when igniting or operating the equipment.

Do not handle the flame chimney whilst in operation.

Do not lean or stretch over the equipment whilst in operation.

Do not cover the chimney whilst in use. **Do not** block or obstruct ventilation slots / airways.

Do not spill substances onto the unit. If spillage does occur, disconnect unit from mains supply. If using hazardous substances please adhere to standard laboratory operating procedures.

Do not position the product so that it is difficult to disconnect from the mains supply.

Do not move or carry the unit when in use or connected to the mains electricity supply.

Important: Allow sufficient time for the chimney to cool before handling.

Do not use acetylene with the flame photometer.

Warning: Over adjustment of the fuel valve will cause excess flame.

Avoid installing the flame photometer in areas that are susceptible to drafts, but ensure that there is adequate ventilation to prevent any build-up of gas.

Before using any cleaning or decontamination methods except those specified by the manufacturer, **responsible bodies** should check with the manufacturer that the proposed method will not damage the equipment.

In order to completely disconnect power to the flame photometer the mains power cord must be detached from the back of the unit.

Ensure a suitably rated detachable mains cord is used.

This hazard symbol is present on the flame chimney outer casing and indicates that the surface may be **hot to touch**.

Français

Consignes de sécurité

Veuillez lire attentivement ces informations avant d'installer ou d'utiliser cet équipement.

1. L'appareil décrit dans ce manuel est conçu pour n'être utilisé que par ~~un~~ du personnel qualifié. Tous les réglages et toutes les interventions d'entretien ou de réparation doivent être effectués tel que décrits dans ce manuel, par une personne habilitée et ayant été informée des risques encourus.
2. Il est essentiel que les utilisateurs et les techniciens d'entretien mettent en œuvre des méthodes de travail sûres, en complément des instructions détaillées fournies dans ce manuel.
3. Aucun élément autre que ceux définis dans les procédures d'entretien indiquées dans le présent manuel n'est réparable directement par l'utilisateur. Le retrait des capots et les tentatives de réglage ou d'entretien du fait d'un membre du personnel non qualifié conduiront à l'annulation de la garantie et sont susceptibles d'entraîner des frais supplémentaires en cas de réparation.
4. Lors de l'utilisation de produits chimiques, une attention particulière doit impérativement être portée aux fiches de données de sécurité qui les accompagnent. Les procédures de laboratoire classiquement reconnues pour la manipulation des produits chimiques doivent être mises en œuvre.
5. En cas de suspicion d'altération de la sécurité de l'appareil de quelque manière que ce soit, celui-ci doit être mis hors service et son utilisation doit être rendue impossible. L'anomalie ou panne doit être immédiatement signalée à l'autorité responsable de l'entretien.

REMARQUE : le non-respect des conditions d'utilisation de l'équipement indiquées dans ce manuel du fabricant est susceptible de compromettre votre sécurité et d'entrainer l'annulation de la garantie. La garantie ne couvre pas les dommages causés par une mauvaise installation ou une mauvaise utilisation de l'équipement.

1.1. Prévention des incendies et des chocs électriques.

Afin d'éviter tout risque d'incendie ou de choc électrique, **N'OUVREZ PAS** votre appareil sans autorisation. Seul un personnel qualifié est habilité à effectuer des interventions de réparation sur l'appareil.

Ne remplacez les fusibles qu'avec les références indiquées dans le chapitre 4.1.2.

Assurez-vous que l'alimentation secteur soit conforme aux données nominales mentionnées sur la plaque signalétique située à l'arrière de cet appareil.

N'utilisez **jamais** cet appareil sans prise électrique raccordée à la terre ou à une masse. Assurez-vous que l'alimentation secteur soit correctement reliée à la terre ou à une masse conformément aux réglementations locales en vigueur.

Pratiques de base pour une utilisation sûre

Suivez toujours les bonnes pratiques de laboratoire lors de l'utilisation de cet appareil. Portez une attention particulière aux procédures de santé et de sécurité de votre entreprise et aux procédures réglementaires, ainsi qu'à toutes les lois applicables associées en vigueur dans votre région. Référez-vous aux procédures de laboratoire concernant les substances utilisées et assurez-vous que tous les risques impliqués (explosion, implosion ou libération de gaz toxiques ou inflammables) aient été convenablement pris en compte avant toute manipulation. Lors de l'utilisation de certaines substances, la libération de gaz dangereux peut nécessiter l'utilisation d'une hotte ou de tout autre moyen d'extraction.

Portez une attention particulière au**x** risque**s** de contamination**s** biologique**s**. Assurez-vous que le tube capillaire, le nébuliseur, la chambre de mélange ainsi que le tube d'évacuation des résidus soient stérilisés après utilisation.

Assurez-vous que l'équipement soit utilisé sur une surface propre, sèche, solide et non-combustible et qu'un espace d'au moins 300mm soit laissé tout autour ainsi qu'un dégagement d'au moins 1m au-dessus de la cheminée.

Assurez-vous que la cheminée extérieure soit correctement installée avant d'utiliser l'équipement.

Attention : assurez-vous que les tuyaux de gaz et d'air soient correctement raccordés et qu'**aucune fuite de gaz** ne subsiste avant de d'allumer l'appareil.

Assurez-vous que l'appareil soit correctement raccordé à la bouteille de gaz en veillant à l'absence de fuite de gaz. Assurez-vous qu'un régulateur de gaz approprié soit utilisé et qu'il soit correctement raccordé. L'organe responsable doit veiller à ce que le type de connecteur utilisé à la sortie du régulateur de la pression du gaz soit conforme aux exigences en vigueur dans le pays.

Les opérations de mise en place et de retrait du tube capillaire de l'aiguille du nébuliseur doivent être effectuées avec précaution.

Il est recommandé de ne pas laisser le photomètre de flamme sans surveillance pendant son fonctionnement.

NE PAS utiliser et/ou manipuler l'appareil avec les mains mouillées.

NE PAS regarder dans la cheminée lors de l'allumage ou en cours d'utilisation de l'équipement.

NE PAS manipuler la cheminée pendant le fonctionnement de l’appareil.

NE PAS pencher ou incliner l'équipement pendant son fonctionnement.

NE PAS recouvrir la cheminée en cours d'utilisation. NE PAS bloquer et/ou obstruer les fentes de ventilation ou d'aération.

NE PAS déverser de substances sur l'appareil. En cas de déversement, déconnectez immédiatement l'appareil de l'alimentation secteur. En cas d'utilisation de substances dangereuses, veuillez respecter les procédures d'utilisation de laboratoire standard.

NE PAS placer l'appareil dans une position rendant difficile sa déconnexion de l'alimentation secteur.

NE PAS déplacer et/ou transporter l'appareil en cours d'utilisation ou lorsqu'il est raccordé à l'alimentation électrique secteur.

Important : laissez la cheminée refroidir avant de la manipuler.

NE PAS utiliser d'acétylène avec le photomètre de flamme.

Avertissement : un réglage inapproprié du robinet de combustible permettant un débit excessif entrainera une flamme trop importante.

Évitez d'installer le photomètre de flamme dans une zone exposée aux courants d'air, tout en vous assurant que cette zone est suffisamment ventilée pour éviter toute accumulation de gaz.

Avant d'utiliser toute méthode de nettoyage ou de décontamination, à l'exception de celles spécifiées par le fabricant, **les organes responsables** doivent vérifier que la méthode proposée n'endommagera pas l'appareil.

Afin de débrancher complètement le photomètre de flamme, les câbles secteur doivent être détachés de l'arrière de l'appareil.

Ce symbole de danger est présent sur le boîtier extérieur de la cheminée de la flamme et indique que la surface peut être **chaude au toucher**.

Italiano

Informazioni sulla sicurezza

Si prega di leggere attentamente le seguenti istruzioni prima di installare o utilizzare questa apparecchiatura.

1. L'apparecchiatura descritta nel presente manuale è stata progettata per essere utilizzata esclusivamente da personale qualificato. Qualsiasi intervento a scopo di regolazione, manutenzione e riparazione deve essere eseguito secondo la modalità descritta nel presente manuale da personale qualificato e a conoscenza dei rischi connessi.
2. Il personale addetto all'utilizzo e alla manutenzione dell'apparecchiatura deve implementare un sistema di lavoro sicuro e seguire le istruzioni dettagliate presenti in questo manuale.
3. Ad esclusione delle parti indicate nelle procedure di manutenzione contenute in questo manuale, l'apparecchiatura non contiene componenti che possano essere riparati dall'utente. La rimozione di coperture ed eventuali tentativi di regolazione o riparazione da parte di personale non qualificato renderanno nulla la garanzia e potranno generare dei costi aggiuntivi per la riparazione.
4. Fare sempre riferimento ai dati sulla salute e la sicurezza forniti insieme ai prodotti chimici utilizzati. Implementare le procedure di laboratorio comunemente accettate per la manipolazione sicura dei prodotti chimici.
5. Se si sospetta che la sicurezza dell'unità sia stata compromessa, disattivare e rendere inutilizzabile l'unità. La condizione di guasto deve essere immediatamente comunicata al responsabile della manutenzione appropriato.

NOTA: Il mancato rispetto delle istruzioni sull'utilizzo fornite dal fabbricante può compromettere la sicurezza di base offerta dall'apparecchiatura e rendere nulla la garanzia. La garanzia non copre i danni causati da un'installazione scorretta o da un uso improprio dell'apparecchiatura.

Prevenzione degli incendi e delle scosse elettriche.

Per evitare il rischio di incendio o scossa elettrica, **NON** aprire l'apparecchiatura senza autorizzazione. Solo il personale qualificato addetto alla manutenzione può tentare di riparare questo prodotto.

Sostituire i fusibili solo con quelli del tipo indicato nella sezione 4.1.2.

Assicurarsi che l'alimentazione della rete elettrica sia conforme ai dati nominali indicati nella targhetta identificativa posizionata sul retro di questa apparecchiatura.

Non utilizzare **mai** questa apparecchiatura senza il collegamento di terra/massa. Assicurarsi che la tensione di alimentazione sia correttamente messa a terra/massa in conformità con la legislazione vigente nel proprio paese.

Pratica di utilizzo sicuro generale

Seguire sempre le buone pratiche di laboratorio quando si utilizza questa apparecchiatura. Accettare e implementare le procedure per la salute e la sicurezza vigenti, quelle stabilite dalla propria azienda e da qualsiasi normativa applicabile alla propria area di lavoro. Controllare le procedure di laboratorio per le sostanze utilizzate e assicurarsi che tutti i rischi potenziali (ad es. esplosione, implosione o rilascio di gas tossici o infiammabili) siano stati adeguatamente presi in considerazione prima di procedere. Quando si utilizzano determinate sostanze, il rilascio di gas pericolosi può rendere necessario l'utilizzo di una cappa chimica aspirante o di altri mezzi di estrazione.

Fare attenzione alla contaminazione biologica. Assicurarsi che dopo l'utilizzo venga eseguita la sterilizzazione del tubo capillare, dello scarico, del nebulizzatore e della camera di miscelazione.

Assicurarsi che l'apparecchiatura venga utilizzata su una superficie di lavoro pulita, asciutta, non combustibile e solida con almeno 300 mm di spazio libero su ogni lato e almeno 1 m sopra la ciminiera.

Assicurarsi che la ciminiera esterna sia stata adeguatamente installata prima di utilizzare l'apparecchiatura.

Attenzione: Prima dell'accensione, assicurarsi che i tubi del gas e dell'aria siano stati collegati correttamente e che **non presentino perdite**.

Assicurarsi che l'apparecchiatura sia stata collegata correttamente alla bombola del gas e che non vi siano perdite. Assicurarsi che sia stato utilizzato il regolatore del gas appropriato e che sia stato collegato correttamente. L'organo responsabile deve assicurarsi che il tipo di connettore utilizzato all'uscita del regolatore di pressione-gas sia conforme ai requisiti nazionali applicabili.

Durante l'installazione e la rimozione del tubo capillare, prestare attenzione all'ago del nebulizzatore.

Si sconsiglia di lasciare incustodito il fotometro a fiamma durante il funzionamento.

Non utilizzare o manipolare nessuna parte di questa apparecchiatura con le mani bagnate.

Non guardare dentro la ciminiera durante l'accensione o il funzionamento dell'apparecchiatura.

Non manipolare la ciminiera della fiamma durante il funzionamento.

Non appoggiarsi o allungarsi sopra l'apparecchiatura durante il funzionamento.

Non coprire la ciminiera durante l'utilizzo. **Non** bloccare od ostruire i condotti/le aperture di aerazione.

Non rovesciare sostanze sull'apparecchiatura. In caso di rovesciamento, scollegare l'apparecchiatura dalla rete elettrica. Se si utilizzano sostanze pericolose, seguire le procedure operative standard di laboratorio.

Non posizionare l'apparecchiatura in modo che sia difficile scollegarla dalla rete elettrica.

Non spostare o trasportare l'apparecchiatura se in funzione o collegata alla rete elettrica.

Importante: Lasciar raffreddare la ciminiera per un tempo adeguato prima di manipolarla.

Non utilizzare acetilene con il fotometro a fiamma.

Avvertenza: La sovraregolazione della valvola del carburante genera una fiamma eccessiva.

Non installare il fotometro a fiamma in zone soggette a correnti, ma assicurarsi che vi sia una ventilazione adeguata per evitare accumuli di gas.

Prima di mettere in atto qualsiasi metodo di pulizia o decontaminazione, ad eccezione di quelli specificati dal fabbricante, **gli organi responsabili** devono verificare insieme al fabbricante che i metodi proposti non danneggino l'apparecchiatura.

Al fine di scollegare completamente l'alimentazione del fotometro a fiamma, il cavo di alimentazione deve essere scollegato dal retro dell'unità.

Questo simbolo di pericolo è presente sulla ciminiera della fiamma e indica che la superficie possa risultare **molto calda al tatto**.

Español

Información de seguridad

Lea atentamente esta información antes de instalar o usar el equipo.

1. La unidad descrita en este manual está diseñada para ser manejada solamente por personal cualificado. Cualquier ajuste, mantenimiento y reparación debe realizarse tal y como se define en este manual, por una persona cualificada y que sea consciente de los riesgos que implica.
2. Es esencial que, tanto el personal operativo como el de mantenimiento, usen un sistema de trabajo seguro, además de las instrucciones detalladas especificadas en este manual.
3. Además de los elementos definidos en los procedimientos de mantenimiento en el presente manual, en este instrumento no hay elementos que requieran mantenimiento o reparación por parte del usuario. La retirada de las cubiertas y el intento de ajuste o mantenimiento por personal no cualificado invalidará la garantía y puede incurrir en cargos adicionales para su reparación.
4. Es necesario remitirse siempre a los datos de Salud y Seguridad suministrados con cualquier producto químico usado. Deben emplearse procedimientos de laboratorio generalmente aceptados para la manipulación segura de los productos químicos.
5. Si se sospecha que la seguridad de la unidad ha sido alterada de alguna forma, la unidad debe inutilizarse y deben tomarse medidas para impedir el funcionamiento pretendido. El estado de avería debe ser notificado inmediatamente a la autoridad de mantenimiento competente.

NOTA: La no utilización de este equipo de acuerdo con el manual del fabricante puede comprometer su protección de seguridad básica ofrecida por el equipo y puede invalidar la garantía. La garantía no cubre el daño causado por una instalación defectuosa o un uso indebido del equipo.

Prevención de incendios y choque eléctrico.

Para prevenir el riesgo de incendio o choque eléctrico, **NO** abra la caja del producto sin autorización. Únicamente el personal de mantenimiento cualificado debe intentar reparar este producto.

Sustituya los fusibles únicamente con el tipo que se enumera en la sección 4.1.2.

Asegúrese de que la alimentación eléctrica coincide con la potencia nominal indicada en la placa identificativa ubicada en la parte posterior de este producto.

No ponga en marcha nunca este equipo sin conexión a tierra / masa. Asegúrese de que la tensión de la red eléctrica esté correctamente conectada a tierra / masa de acuerdo con la actual legislación de la zona.

Práctica operativa y de seguridad estándar

Siga siempre las buenas prácticas de laboratorio cuando use este equipo. Tenga debidamente en cuenta los procedimientos legislativos de seguridad y de salud y seguridad de su compañía y toda la legislación asociada aplicable en las zonas de operación. Compruebe los procedimientos de laboratorio para las sustancias que están siendo usadas y asegúrese de que todos los riesgos (por ejemplo, explosión, implosión o liberación de gases tóxicos o inflamables) que puedan producirse han sido abordados adecuadamente antes de continuar. Cuando se usan ciertas sustancias, la liberación de gases peligrosos puede requerir el uso de una campana extractora de gases u otros medios de extracción.

Tenga en cuenta la contaminación biológica. Asegúrese de que se realiza la esterilización del tubo capilar, los residuos, el nebulizador y la cámara de mezclado después del uso.

Asegúrese de que el equipo se usa en una superficie de trabajo sólida, no combustible, seca y limpia con al menos 300 mm de espacio libre adecuado alrededor y al menos 1 m de espacio libre por encima de la chimenea.

Asegúrese de que la chimenea externa está instalada apropiadamente antes de poner en funcionamiento el equipo.

Atención: Asegúrese de que las tuberías de gas y de aire se han conectado correctamente y de que **no hay fugas de gas** presentes antes del encendido.

Asegúrese de que la unidad está conectada correctamente al cilindro de gas, asegurándose de que no hay fugas de gas. Asegúrese de que se usa y se conecta adecuadamente el regulador de gas correcto. El organismo responsable debe asegurarse de que el tipo de conector utilizado en la salida del regulador de presión del gas cumpla los requisitos nacionales aplicables.

Tenga cuidado al instalar y retirar el tubo capilar en/de la aguja nebulizadora.

No es recomendable dejar el fotómetro de llama desatendido durante el funcionamiento.

No accione o manipule parte alguna del producto con las manos húmedas.

No mire hacia abajo en la chimenea de llama cuando encienda o maneje el equipo.

No manipule la chimenea de llama mientras está funcionando.

No se incline o se estire sobre el equipo mientras está funcionando.

No tape la chimenea de llama mientras está funcionando. **No** bloquee u obstruya las ranuras de ventilación / los conductos de aire.

No derrame sustancias sobre la unidad. Si se producen derrames, desconecte la unidad de la red eléctrica. Si usa sustancias peligrosas, cíñase a los procedimientos operativos de laboratorio estándar.

No coloque el producto de modo que sea difícil desconectarlo de la red eléctrica.

No mueva ni transporte la unidad cuando esté en funcionamiento o esté conectada a la alimentación eléctrica.

Importante: Deje tiempo suficiente para que la chimenea se enfríe antes de la manipulación.

No use acetileno con el fotómetro de llama.

Advertencia: El ajuste excesivo de la válvula de combustible provocará una llama excesiva.

Evite instalar el fotómetro de llama en zonas expuestas a corrientes de aire pero asegúrese de que haya una ventilación adecuada para evitar acumulaciones de gas.

Antes de utilizar cualquier método de limpieza o descontaminación distinto del especificado por el fabricante, los **organismos responsables** deben comprobar con el fabricante que el método propuesto no dañe el equipo.

Para desconectar del todo la alimentación del fotómetro de llama, debe desenchufarse el cable de la toma de red de la parte posterior de la unidad.

Este símbolo de riesgo se encuentra en la cubierta exterior de la chimenea de llama e indica que la superficie puede **quemar al tacto**.

Deutsch

Sicherheitsinformationen

Bitte lesen Sie diese Informationen sorgfältig durch, bevor Sie das Gerät installieren oder benutzen.

1. Das in diesem Handbuch beschriebene Gerät darf nur von geschultem Personal bedient werden. Einstellungen, Wartungs- und Reparaturarbeiten sind gemäß den Anweisungen in diesem Handbuch von einer qualifizierten Fachkraft durchzuführen, die über potenzielle Gefahren unterrichtet ist.
2. Es ist wichtig, dass sowohl das Betriebs- als auch das Wartungspersonal zusätzlich zu den detaillierten Anweisungen in diesem Handbuch ein sicheres Arbeitssystem anwenden.
3. Außer der in den Wartungsverfahren in diesem Handbuch angegebenen Teile gibt es in diesem Gerät keine Teile, die vom Benutzer zu warten sind. Die Entfernung von Abdeckungen sowie der Versuch der Einstellung oder Wartung durch unqualifiziertes Personal führt dazu, dass die Garantie ungültig wird und kann zusätzliche Reparaturkosten nach sich ziehen.
4. Die Angaben zum Gesundheitsschutz und zur Arbeitssicherheit, die mit verwendeten Chemikalien mitgeliefert werden, sind jederzeit zu berücksichtigen. Es sind allgemein anerkannte Laborverfahren für die sichere Handhabung von Chemikalien einzusetzen.
5. Falls vermutet wird, dass die Sicherheit des Geräts auf irgendeine Weise beeinträchtigt wurde, ist das Gerät außer Betrieb zu setzen und gegen den Betrieb zu sichern. Die Störung ist der entsprechenden Wartungsstelle umgehend zu melden.

HINWEIS: Wird das Gerät nicht gemäß den Anweisungen des Herstellerhandbuchs verwendet, kann dies dazu führen, dass Ihr grundlegender Sicherheitsschutz durch das Gerät beeinträchtigt und die Garantie ungültig wird. Die Garantie deckt keine Schäden durch fehlerhafte Installation oder falsche Verwendung des Geräts ab.

Verhütung von Feuer und Stromschlägen.

Um die Gefahr von Bränden oder Stromschlägen zu verhindern, öffnen Sie das Produktgehäuse **NICHT** ohne Genehmigung. Nur qualifiziertes Wartungspersonal darf dieses Produkt reparieren.

Ersetzen Sie Sicherungen nur durch die in Abschnitt 4.1.2. angegebene Sicherungsart.

Stellen Sie sicher, dass die Netzstromversorgung der auf dem Typenschild auf der Rückseite des Produkts angegebenen Nennleistung entspricht.

Betreiben Sie das Gerät **niemals** ohne Erd-/Masseverbindung. Stellen Sie sicher, dass die Netzspannung in Übereinstimmung mit der entsprechenden aktuellen Gesetzgebung korrekt geerdet ist.

Allgemeine sichere Betriebspraxis

Befolgen Sie bei der Verwendung des Geräts immer die gute Laborpraxis. Beachten Sie die Sicherheitsverfahren Ihres Unternehmens, die gesetzlichen Gesundheits- und Sicherheitsverfahren sowie sämtliche, damit verbundenen Rechtsvorschriften, die für Ihre Arbeitsgebiete gelten. Überprüfen Sie die Laborverfahren für die verwendeten Stoffe und stellen Sie sicher, dass alle potenziellen Gefahren (z.B. Explosionen, Implosionen oder Freisetzung von toxischen oder entzündlichen Gasen) auf angemessene Weise berücksichtigt wurden, bevor die Arbeit fortgesetzt wird. Bei der Verwendung von bestimmten Stoffen kann es durch die Freisetzung von gefährlichen Gasen eventuell notwendig sein, dass ein Laborabzug oder eine andere Art der Beseitigung verwendet wird.

Seien Sie sich der biologischen Kontamination bewusst. Sorgen Sie dafür, dass das Kapillarrohr, der Abfallbehälter, die Vernebler- und Mischkammer nach der Verwendung sterilisiert werden.

Stellen Sie sicher, dass sich das Gerät auf einer sauberen, trockenen, nicht brennbaren und festen Arbeitsfläche mit einem geeigneten Abstand von mindestens 300 mm in jede Richtung befindet und mindestens 1 m Platz oberhalb des Schornsteins vorhanden ist.

Stellen Sie sicher, dass der äußere Schornstein vor dem Betrieb des Geräts ordnungsgemäß installiert wurde.

Achtung: Achten Sie darauf, dass die Gas- und Luftrohre ordnungsgemäß angeschlossen wurden und dass vor der Entzündung **keine Gaslecks** vorhanden sind.

Stellen Sie sicher, dass das Gerät ordnungsgemäß mit der Gasflasche verbunden ist und keine Gaslecks vorhanden sind. Vergewissern Sie sich, dass der richtige Gasregler verwendet wird und ordnungsgemäß angeschlossen ist. Die zuständige Stelle muss sicherstellen, dass der am Ausgang des Gasdruckreglers verwendete Steckertyp den geltenden nationalen Vorgaben entspricht.

Seien Sie vorsichtig, wenn Sie das Kapillarrohr an der Verneblernadel anbringen und von ihr entfernen.

Es wird empfohlen, das Flammenphotometer während des Betriebs nicht unbeaufsichtigt zu lassen.

Bedienen bzw. fassen Sie **keine** Teile des Produkts mit nassen Händen an.

Sehen Sie bei der Entzündung bzw. beim Betrieb des Geräts **nicht** in den Flammenschornstein.

Fassen Sie den Flammenschornstein während des Betriebs **nicht** an.

Lehnen bzw. beugen Sie sich während des Betriebs **nicht** über das Gerät.

Decken Sie den Schornstein während des Betriebs **nicht** ab. Blockieren oder versperren Sie **keine** Lüftungsschlitze / Luftkanäle.

Verschütten Sie **keine** Stoffe auf dem Gerät. Sollte dies trotzdem passieren, trennen Sie das Gerät von der Netzspannung. Halten Sie sich bei der Verwendung von gefährlichen Stoffen bitte an die Standardverfahren für den Laborbetrieb.

Stellen Sie das Produkt **nicht** so auf, dass es schwierig ist, das Gerät von der Netzspannung zu trennen.

Transportieren oder bewegen Sie das Gerät **nicht**, wenn es in Betrieb oder an die Netzstromversorgung angeschlossen ist.

Wichtig: Warten Sie lange genug, bis der Schornstein abgekühlt ist, bevor Sie ihn anfassen.

Verwenden Sie **kein** Acetylen in Verbindung mit dem Flammenphotometer.

Achtung: Eine übermäßige Justierung des Brennstoffventils führt zu übermäßiger Flammenbildung.

Stellen Sie das Flammenphotometer nicht in zugigen Bereichen auf, aber sorgen Sie dafür, dass eine ausreichende Lüftung vorhanden ist, um die Ansammlung von Gas zu verhindern.

Vor der Durchführung von anderen Reinigungs- oder Dekontaminationsverfahren als den vom Hersteller angegebenen Methoden müssen die **zuständigen Stellen** beim Hersteller nachfragen, ob die entsprechende Methode das Gerät beschädigen könnte.

Um das Flammenphotometer vollständig vom Strom zu trennen, ist das Netzkabel von der Rückseite der Einheit abzunehmen.

Dieses Gefahrensymbol befindet sich auf dem äußeren Gehäuse des Flammenschornsteins und zeigt an, dass die Fläche eventuell **beim Berühren heiß ist**.

Contents:

SECTION 1 ..... **19**

Introduction **19**
1.1 Instrument description 19
1.2 Specification 19
1.3 Principles of operation 20
1.4 Good practice guidelines 22

SECTION 2 ..... **23**

Installation **23**
2.1 Services required 23
2.2 Unpacking 24
2.3 Assembly 25
2.4 Installation 27
2.5 Accessories 28

SECTION 3 ..... **29**

Analysis Preparation **29**
3.1 Calibration standards 29
3.2 Sample preparation 31
3.3 Dilution 31

SECTION 4 ..... **32**

Operation **32**
4.1 Front and rear panel controls 32
4.2 Operation – Flame Ignition and Optimisation 34
4.3 Calibration: PFP7 36
4.4 Calibration: PFP7/C 38
4.5 Shutdown 38
4.6 Operating precautions 39

SECTION 5 ..... **40**

Accessories **40**
5.1 Water separator 40
5.2 Compressor 40

SECTION 6 ..... **42**

Maintenance **42**
6.1 General 42
6.2 Weekly maintenance 42
6.3 Monthly maintenance 42
6.4 Six-monthly maintenance 43

SECTION 7 ..... **44**

Trouble shooting **44**
7.1 General 44
7.2 Unstable results 44
7.3 Unable to set standard reading 44
7.4 Non-linear results 45
7.5 Flame will not light 45
7.6 No electrical power 45
7.7 Unable to set blank 46
7.8 No reading on display 46

SECTION 8 ..... **46**

Spares **46**
8.1 Minor Spares Kit (PFP7/MINKIT) 46

SECTION 9 ..... **47**

Declaration of Conformity **47**

Section 1

Introduction

1.1 Instrument description

The PFP7 and PFP7/C are low temperature, single channel emission flame photometers designed for the routine determination of sodium (Na), potassium (K) and lithium (Li). Additional filters for the determination of calcium (Ca) and barium (Ba) are supplied with the PFP7. Both versions are fitted with an automatic flame failure detection for user safety, making them ideal for use in clinical, industrial or educational applications. Model PFP7/C is specifically designed for use in clinical applications. The in-built lineariser circuitry enables readings of both Na and K, at normal clinical serum concentrations to be displayed directly in mmol/l. Serum samples must be diluted 200:1 or 100:1 prior to presentation to the flame photometer.

1.2 Specification

	PFP7		PFP7/C	
Ranges	0 to 199.9ppm		120-160 mmol/L Na (linearized)	
			0-10.0 mmol/L K	
Limits of Detection	Na	0.2ppm	Na	0.2ppm
	K	0.2ppm	K	0.2ppm
	Li	0.25ppm	Li	0.25ppm
	Ca	15ppm	-	
	Ba	30ppm	-	
Reproducibility	1% Coefficient of variation (C.V.) for 20 consecutive samples using 10ppm Na set to read at 50.0 (PFP7) or 140 (PFP7/C).			
Linearity	Better than 2% when concentration of 3ppm Na and K and 5ppm Li are set to read 100.			
Specificity	Interference from Na, K and Li when equal in concentration to the test element will be less than 0.5%			
Stability	Better than 2% over 5 minutes when continuously aspirating 10ppm, sample set to read 50.0. Zero drift better than 2% per hour after warm-up.			
Sample requirements	Between 2 and 6 ml/minute			
Recorder Output	Nominal 1.00 volt for readout of 100.0.			
Warm Up	The flame must be alight for at least 15 minutes to ensure achievement of the above stated specification.			
Services	Electrical:		90-125V or 190-250V @ 50/60Hz	
	Air:		Moisture and oil-free.	
	Fuel:		Propane, butane, natural gas or L.P.G.	
Operating Environment	15°C to 35°C			
Size	420 x 360 x 300mm			
Weight	8kg			

1.3 Principles of operation

Flame photometry relies upon the fact that the compounds of the alkali and alkaline earth metals can be thermally dissociated in a flame and that some of the atoms produced will be further excited to a higher energy level. When these atoms return to the ground state they emit radiation which lies mainly in the visible region of the spectrum. Each element will emit radiation at a wavelength specific for that element. The table below gives details of the measurable atomic flame emissions of the alkali and alkaline earth metals in terms of the emission wavelength and the colour produced.

Element	Emission Wavelength (nm)	Flame Colour
Sodium (Na)	589	Yellow
Potassium (K)	766	Violet
Barium (Ba)	554	Lime Green
Calcium (Ca)	622*	Orange
Lithium (Li)	670	Red

*Note: Calcium is measured by using the calcium hydroxide band emission at 622nm as the Calcium main atomic emission occurs at 423nm.

Over certain ranges of concentration the intensity of the emission is directly proportional to the number of atoms returning to the ground state. This is in turn proportional to the absolute quantity of the species volatized in the flame, i.e. light emitted is proportional to sample concentration.

It can be seen that if the light emitted by the element at the characteristic wavelength is isolated by an optical filter and the intensity of that light measured by a photo-detector, then an electrical signal can be obtained proportional to sample concentration. Such an electrical signal can be processed and the readout obtained in a digital form.

A simple flame photometer consists of the following basic components:

a) The burner: a flame that can be maintained in a constant form and at a constant temperature.
b) Nebuliser and mixing chamber: a means of transporting a homogeneous solution into the flame at a steady rate.
c) Simple colour filters (interference type): a means of isolating light of the wavelength to be measured from that of extraneous emissions.
d) Photo-detector: a means of measuring the intensity of radiation emitted by the flame.

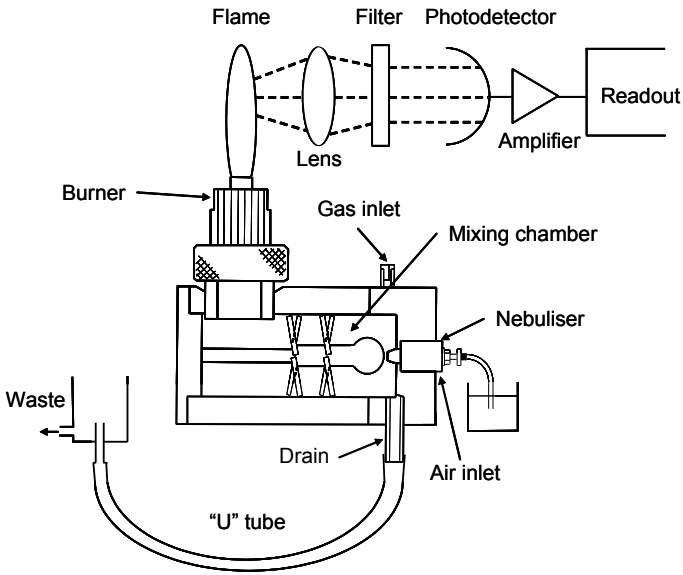

Figure 1.3.1: Schematic diagram showing the component parts of a flame photometer.

The analysis of alkali and alkaline earth metals by flame photometry has two major advantages:

i. Their atoms reach the excited state at a temperature lower than that at which most other elements are excited.
ii. Their characteristic wavelengths are easily isolated from those of most other elements due to wide spectral separation.

The analysis of Na, K, Li, Ba and Ca are typically determined at low temperatures, i.e. 1500-2000°C, therefore suitable fuel mixtures are propane/air, butane/air and natural gas/air.

1.4 Good practice guidelines

1. It is most important that the nebuliser, mixing chamber and burner are kept clean by carrying out the correct shutdown procedure and by periodic maintenance. If high salt solutions are aspirated, correspondingly longer periods should be spent aspirating deionised water prior to shut down.

2. It is recommended that blank and standard solutions should have a wetting agent (e.g. Triton X-100[1] or Decon 90) added to promote good stability and self-cleaning. Any such wetting agent should be non-ionic and used at a concentration of less than 3ppm. It should be added to the blank, standards and samples at the same concentration.

3. Take care when preparing standards. The performance of the instrument depends upon the accuracy and purity of the calibration standards.

4. If standard solutions are required to be stored for any length of time or at an elevated temperature, a suitable mould inhibitor e.g. azide should be added. However if this contains the element to be measured (e.g. sodium) it is important that the samples also contain an equivalent amount.

5. Always sample from the top half of the sample container. The bottom half may contain sediment or particulate matter which could easily block the fine tubing used in the nebuliser.

6. Always use recommended spares. Even where an alternative part may be obviously suitable there may be good reasons for not using it.

7. Never use glass containers to store calibration standards.

[1] Triton X-100 is a registered trademark of Union Carbide Chemicals and Plastics Co. Inc.

Section 2

Installation

2.1 Services required

The fuel and air supplies to the instrument must be clean and dry and supply pressures regulated within the limits specified. Any contamination, moisture or variation in supply pressure will directly affect the performance of the instrument.

NOTE: The instrument will only operate with the correct type of air compressor and gas regulator.

2.1.1 Voltage

This unit is designed to operate at 90 - 250V and at 50 or 60Hz.

2.1.2 Fuel

- Propane or butane regulated to 10-15 inches water gauge (0.36-0.54psi or 0.025-0.038kg/cm^2).
- Natural gas at mains pressure between 3 and 10 inches water gauge (0.11-0.36psi or 0.0076-0.025kg/cm^2).
- L.P.G. regulated to 10-15 inches water gauge (0.36-0.54psi or 0.025-0.038kg/cm^2).
- Suitable regulators are available from Jenway; refer to Section 2.5.

2.1.3 Air

A supply of dry, clean and pulse-free air at a pressure at 15 - 30psi (approx. 1 - 2 kg/cm^2) at 6 litres/minute is required. A suitable compressor and water separator are available from Jenway; refer to Section 2.5.

2.1.4 Drain

The instrument will need to be sited near a drain or sink to enable disposal of waste liquid. A suitable receptacle can be utilised if provision is made for easy disposal of its contents. **WARNING:** The waste liquid will still contain any hazardous materials that were in the original samples and should be handled and disposed of with the same care. Waste liquid should always be considered to be of a pathogenic nature where the instrument is used in a clinical environment.

2.2 Unpacking

Remove the instrument from the packaging and ensure the following items are present:

Part	**Part Code**
Model PFP7 Flame photometer *OR* Model PFP7/C Flame photometer	500 701 or 500 731 *OR* 500 801 or 500 831
Auxiliary power plug	009 035
Mains cable with connector (plug optional as ordered)	013 046
Nebuliser inlet tube (500mm)	500 193
Gas tube, low pressure (2 metres)	500 191
Silicon rubber tube (drain)	023 003
Air tube (2 metres)	500 192
Nozzle 1: gas	026 012
Nozzle 2: air	026 013
Allen key, 2.5mm	060 037
Adjustable hose clip	060 083
Drain trap	500 018
Drain trap clip	500 114
Nebuliser cleaning wire	I/500 194

Any shortages or damage should be reported immediately to the manufacturer or local distributor.

2.3 Mixing Chamber Assembly

Place the instrument on a flat, stable bench and proceed as follows (see **Figures 2.3.1** and **2.3.2** below):

1. Take the mixing chamber assembly and ensure that the fluted burner (1) is in place (remove the retaining tape). Place the mixing chamber and burner assembly inside of the flame photometer and line up the burner with the bottom of the chimney. Look down the chimney and ensure that the burner locates centrally in the inner chimney. Screw the locking ring (2) onto the threaded boss provided and tighten until finger tight, ensuring that the mixing chamber is at right angles to the side of the instrument.

2. Fit the nebuliser (3) into the end cap (8) and connect the air tubing to the nebuliser inlet (4).

3. If natural gas is to be used, remove the restrictor screw (5) fitted into the end of the fuel inlet (6) on the mixing chamber. The restrictor screw should remain in place if butane, propane or L.P.G. is to be used as fuel. Keep the restrictor screw in case of any future change in gas supply. Push the fuel tubing onto the fuel inlet connector (6) – this tube can be secured with a metal hose clip.

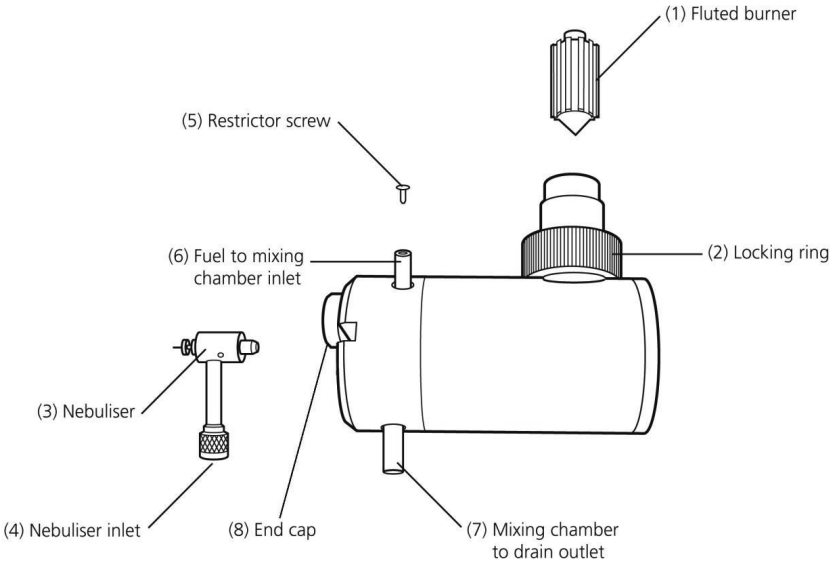

Figure 2.3.1: Assembly of the mixing chamber, burner and nebuliser.

4. Take the drain trap clip (9) and, with the screw provided, fix to the hole situated at the chimney end of the rear panel. Fix a length of silicon rubber tubing (10) onto the side port on the drain trap such that it is long enough to reach either the sink or the waste receptacle to be used. Fit the drain trap into the clip on the rear panel and run the short piece of tubing (11) from the bottom of the drain trap to the mixing chamber waste outlet (7) on the bottom of the mixing chamber. This tube can be pushed on and does not need securing.

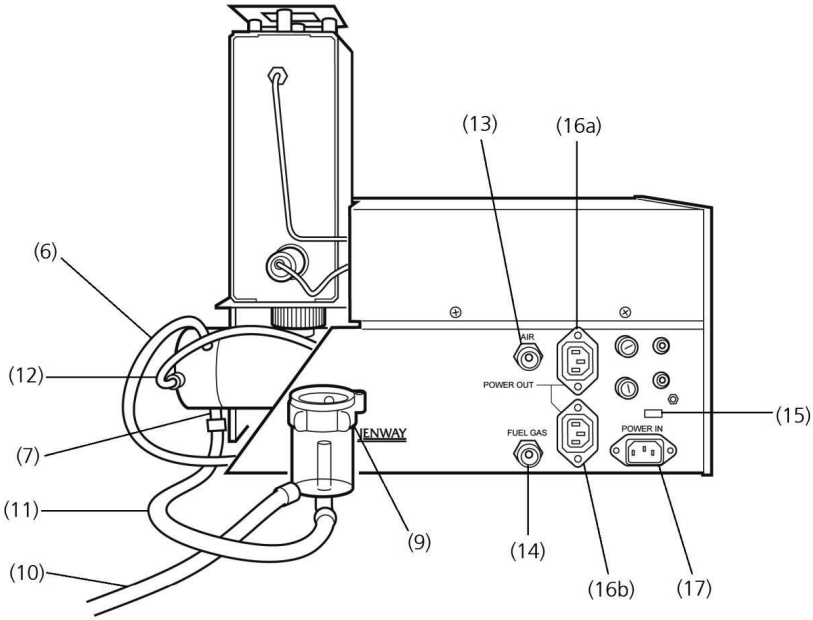

Figure 2.3.2: Rear panel showing the drain trap, air and fuel inlets.

1) Fluted burner
2) Locking ring
3) Nebuliser
4) Nebuliser inlet
5) Restrictor screw
6) Fuel to mixing chamber inlet
7) Mixing chamber to drain outlet
8) End cap
9) Drain trap clip
10) Drain trap to waste containter tubing
11) Mixing chamber to drain trap tubing
12) Compressed air to nebuliser tubing
13) Compressed air input connector
14) Fuel gas input connector
15) Adjustable voltage fuse
16) POWER OUT sockets
17) POWER IN socket

2.4 Installation

WARNING

The exhaust gases from the chimney are very hot. No obstruction should be placed above the instrument and the instrument should be located in a position that makes accidental contact with the chimney or its exhaust unlikely.

The instrument needs to be operated in a well-ventilated room (although very strong draughts should be avoided).

Ensure the air tubing is routed away from sources of heat.

Fit the air and fuel inlet connectors to the ports provided on the rear of the instrument.

1. Fit the appropriate lengths of 8mm and 6mm tubing to the connectors 13 and 14 (figure 2.3.2). Run the tubing to the air and fuel supplies to be used.

   NOTE: The maximum inlet pressure and regulation requirements are defined in Section 2.1.

   Turn on the fuel supply at the cylinder or source and check all fuel joints for leaks by using soap solution or suitable gas detector.

2. Plug the power cable into the POWER IN socket 17 (figure 2.3.2). If necessary connect a suitable plug to the 3-pin AC supply lead. The colours of the wires conform to the internationally recognised standard such that:

BROWN	**LIVE**
BLUE	**NEUTRAL**
GREEN/YELLOW	**EARTH**

   IMPORTANT – THE INSTRUMENT MUST BE EARTHED.

   The green/yellow wire in the AC supply must be connected to a properly grounded terminal.

   If a compressor is to be run directly from the instrument then it should be connected to the plugs provided and connected to the POWER OUT sockets 16a and 16b (figure 2.3.2).

   Press the power switch on the front panel. The digital display should be illuminated.

3. Fill the centre tube of the drain trap and the connecting silicon rubber tubing to the mixing chamber with deionised water. Check that no air bubbles are trapped in this tube and that it flows and runs to waste freely. Ensure that the drain trap is pushed completely down on its clip.

   When the mixing chamber and drain trap are fully connected your flame photometer should look similar to the illustration below:

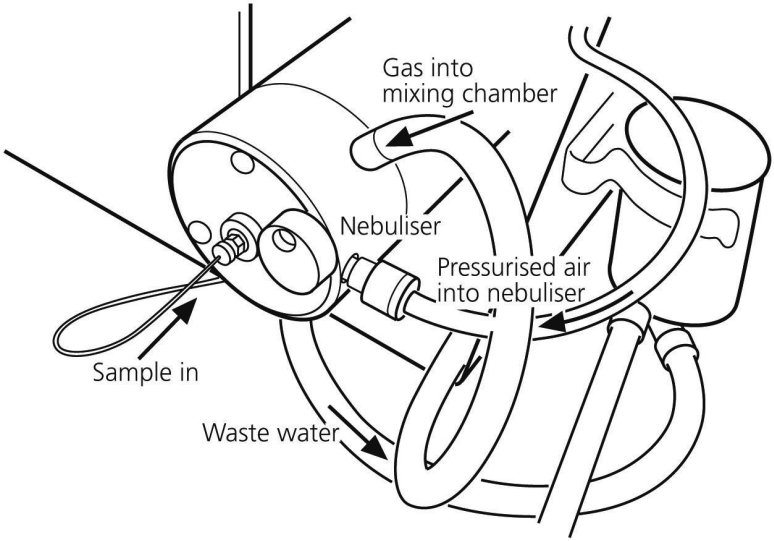

Figure 2.4.1: An alternative view of the mixing chamber showing inlet and outlet tubing

2.5 Accessories

Always use recommended spares and accessories. Even if an alternative part may appear obviously suitable there may be some minor variations in specification that could degrade the performance of the instrument.

Accessories	**Part Code**
Model 8515 air compressor (220V 50Hz)	535 001
Model 8516 air compressor (110V 60Hz)	535 002
Butane regulator	500 178
Propane regulator	500 179
Natural gas regulator	500 180
Water separator (small)	500 176
Water separator (large)	500 177
Dust cover	500 134
Cleaning solution (1 litre)	025 171
Minor spares kit	PFP7/MINKIT

Section 3

Analysis Preparation

3.1 Calibration standards

A comprehensive range of aqueous calibration standards is available from Jenway. These must be diluted to a suitable concentration for aspiration into the flame (see Sections 3.3 and 4.3)

Industrial Standards (500ml)	Part Code
1000ppm K	025 023
1000ppm Li	025 024
3000ppm Ba	025 025
1000ppm Na	025 021
1000ppm Ca	025 009

When preparing standards always observe the following:

1. Standards must always contain the constituents that are present in the samples in the same concentration ratios; i.e. if samples are prepared in 0.05M HCl then the standards should also contain 0.05M HCl.

2. Always ensure that the standards encompass the expected range of the sample concentrations.

3. Standards should be prepared so as to ensure that the region in which measurements are made coincide with the concentrations that produce the optimum performance from the flame photometer, i.e…

    - …when measuring sodium, the top standard is ideally 10ppm,
    - …when measuring potassium, the top standard is ideally 10ppm,
    - ...when measuring calcium, the top standard is ideally 100ppm,
    - …when measuring barium, the top standard is ideally 1000ppm,
    - …when measuring lithium, the top standard is ideally 10ppm.

NOTE: The blank used should contain all the constituents of the standard solutions except the element being measured.

Since a flame photometer measures the concentration of the element itself in solution, standard solutions prepared from the salts of sodium, potassium, lithium, calcium and barium must be made up to contain the concentrations required in terms of the quantity of the elements.

Below are two examples of how to prepare standards of 1mg Na/100ml (10ppm Na) and 1mg K/100ml (10ppm K).

3.1.1 Sodium

Accurately weigh 0.634g of dry "Analar" quality NaCl, dissolve in pure deionised water and wash into a 500ml volumetric flask. Fill to the mark with pure deionised water. To prepare the standard solution for use with the flame photometer, this stock solution should be diluted 1 in 50.

Calculation:

Atomic weight Na = 23.0 Molecular weight NaCl = 58.46

Therefore, 0.634g NaCl contains $\frac{0.634 \times 23}{58.46} = 0.25g$ Na

Thus in 500ml of solution there is 250mg Na or 50mg Na/100ml.
Diluting 1 in 50 gives a standard of 1mg Na/100ml = 10ppm Na.

3.1.2 Potassium

Accurately weigh 0.477g of dry "Analar" quality KCl, dissolve in pure deionised water and wash into a 500ml volumetric flask. Fill to the mark with pure deionised water. To prepare the standard solution for use with the flame photometer, this stock solution should be diluted 1 in 50.

Calculation:

Atomic weight K = 39.1 Molecular weight KCl = 74.56

Therefore, 0.477g KCl contains $\frac{0.477 \times 39.1}{74.56} = 0.25g$ K

Thus in 500ml of solution there is 250mg K or 50mg K/100ml.
Diluting 1 in 50 gives a standard of 1mg K/100ml = 10ppm K.

3.1.3 Storage

Store solutions away from direct sunlight in a cool place, ideally at temperatures below 25°C. Glass containers should not be used for storage as they can affect the sodium concentration levels. Standards should be stored in sealed, plastic vessels and in high concentrations, (e.g. as a stock 1000ppm solution) and dilutions prepared as required. The long-term storage of low concentration standards is not recommended due to degradation of ionic species.

3.2 Sample preparation

There are several practical points regarding sample preparation, which should be adhered to in order to achieve the required accuracy in your analysis:

1. Avoid handling samples with fingers. This leads to serious contamination, e.g. if a finger is immersed in 20ml of deionised water the resulting Na concentration will exceed that of a 10ppm standard.

2. All analyses involve the use of a diluent, which is almost always deionised water. This should be of the highest quality for accurate flame analysis. Sodium, potassium and calcium are present in high concentrations in tap water and thus efficient deionisation is essential.

3. Species that cause interference should be removed from samples or the equivalent concentration of the interfering ion should be present in the standards so as to avoid erroneous results, e.g. if a sample of approximately 10ppm Na contains approximately 1000ppm Ca, then Na analysis can only be achieved by removing the Ca with oxalate/oxalic acid or ensuring all standards contain 1000ppm Ca.

4. Always try to follow a well-documented analytical procedure, which should contain information pertaining to interference removal when applicable.

5. Standards and samples should not be exposed to the atmosphere for long periods due to contamination from airborne particles and the evaporation of the solvent that could lead to elevated concentrations.

6. If you require any technical or application assistance please contact the team at cptechsupport@coleparmer.com for advice.

3.2.1 Sample extraction

A number of methods for extracting sodium, potassium, lithium, calcium and barium from a wide variety of raw materials may be obtained by contacting the technical support helpline at cptechsupport@coleparmer.com or by visiting http://jenway.com/notes_Flame_Photometers.asp

The sample must be in the form of an aqueous solution, with no solid matter present, to be suitable for direct introduction into the flame photometer. This is achieved by:

- Extracting the salts from solid samples using deionised water or suitable extractants e.g. saturated $CaSO_4$ for sodium in soil. Extraction is more successful using a blender, macerator or shaking machine.
- If the sample is organic then the organic material should be removed by ashing. The remaining oxides are then dissolved using strong acids.
- Filtration/centrifugation is used to remove solid debris.

When aqueous, the sample can then be diluted to a known, accurately measured volume using deionised water. If it is a concentrated sample then the dilution ratio should be increased. If the sample concentration is low then a small volume of diluent and initial extractant should be used. Whichever method of extraction is used, the resultant solution must always be free of any particulate matter that may cause blockages in the nebuliser capillary tube.

3.3 Dilution

In order to obtain samples and standards of the right concentration for aspiration into the flame, various levels of dilution will often be necessary. Good quality deionised water should normally be used for carrying out these dilutions and it is recommended that the same batch of water should be used for diluting the samples and standards. More information on typical dilution ratios is given in Section 4.3.

Section 4

Operation

4.1 Front and rear panel controls

4.1.1 Front panel controls

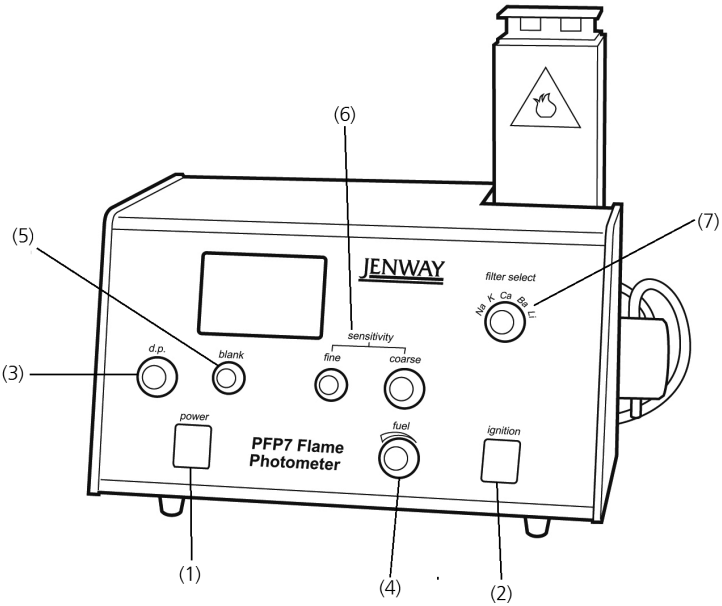

Figure 4.1.1.1: Front panel

1.	**Power**	A two-position rocker switch which controls the AC supply of the instrument. Any accessories connected to the auxiliary **POWER OUT** sockets on the rear panel are also controlled by the front panel **power** switch.
2.	**Ignition**	A spring loaded switch which, when depressed, will cause an electrical discharge between the ignition electrode and the burner unit, thereby causing fuel ignition.
3.	**D.P.**	This dial controls the position of the decimal point on the digital readout.
4.	**Fuel**	A fine needle valve that controls the flow of fuel and enables optimum flame conditions to be set.
5.	**Blank**	This dial control sets the zero point when a blank standard is aspirated.

6. **Sensitivity: Fine and Course** — Two controls which are used in conjunction to set the digital readout to an appropriate number when a calibration standard is aspirated.

7. **Filter Select** — A five position control which will select the appropriate optical filter for the element being determined.

NOTE: For the PFP7/C positions 3 and 4 will normally be blank

4.1.2 Rear panel controls

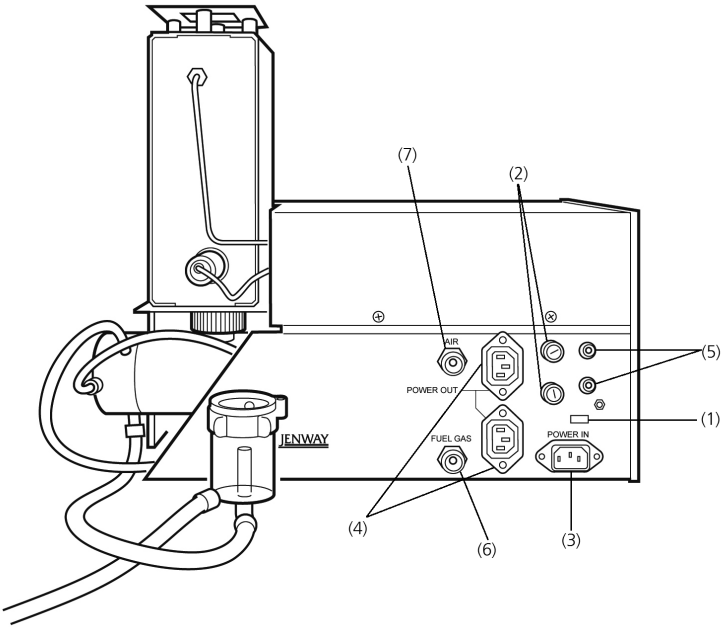

Figure 4.1.2.1: Rear panel

1. **VOLTAGE SELECTION** — A two-position switch marked 230 and 115. These positions allow operation from the voltage supplies 190-250 volts and 90-125 volts respectively at either 50 or 60Hz.
WARNING: when adjusting the operating voltage it may be necessary to change the top fuse as indicated on the rear panel. Please note that the unit is set to the required voltage in the factory depending on the part code ordered.

2. **FUSES** Two fuses are fitted to the instrument. **FS1** is the primary fuse provided to protect the instrument and any accessories connected to the **power out** sockets. **FS2** is to protect the electronic circuitry in the PFP7. Both FS1 and FS2 should be of an anti-surge type.

3. **POWER IN** A three pin receptacle for the AC mains supply.

4. **POWER OUT** Two three pin sockets for flame photometer accessories such as a compressor. The power from these sockets is controlled by the instrument **power** switch on the front panel.

5. **RECORDER** Two 4mm sockets which will provide an analogue signal of approximately 1 volt when the readout is 1000 digits or 100.0, 10.00, 1.000.

6. **FUEL GAS** 1/4" connector for fuel tubing.

   IMPORTANT: Fuel supply must be regulated to 10-15 inches water gauge (0.36-0.54psi or 0.025-0.38kg/cm^2. See section 2.1.2 for information on different fuel types.

7. **AIR** 5/16" connector for air tubing.

   IMPORTANT: Air pressure on the inlet to the instrument must not exceed 30psi (2kg/cm^2). See section 2.1.3.

4.2 Operation – Flame Ignition and Optimisation

1. Ensure that the drain trap is pushed fully down on its clip. Ensure that the drain trap has solution in it and that no air locks are present. If necessary, purge by adding deionised water and allowing the surplus to run away.

2. Close the **fuel** valve by turning fully clockwise. To avoid damaging the valve, it should not be forced.

3. Turn the **fuel** valve the required number of turns anti-clockwise depending on the fuel being used.

Fuel	Number of turns
Propane	3
Butane	4
Natural gas	Fully open
L.P.G.	3.5

4. Turn on the fuel supply at source i.e. cylinder.

5. Switch on electrical power by depressing the **power** switch. If the air compressor is powered separately, switch on the air compressor. Ensure that air is present by listening for the hissing created as it passes through the nebuliser.

6. Depress the ignition switch and hold down. Watch the **FLM** indicator in the display window. When this indicator is illuminated the flame is a light and the ignition switch can be released. If the **FLM** indicator does not light within approximately 20 seconds, release the switch and open the **fuel** valve one additional turn. Allow the gas to disperse before continuing. Depress the ignition switch for a further 20 seconds. This process may be repeated until successful ignition occurs. If the **fuel** valve has to be opened more than 5 turns more than recommended above, refer to Section 7.5.

7. Set the **filter select** control to the desired position.

8. Aspirate deionised water and set the readout to zero by adjusting the **blank** control.

9. Aspirate a standard solution of slightly higher concentration than expected in the samples to be tested. Adjust the **fine and coarse** control until a positive reading is obtained. This is a nominal value to be used in optimising flame conditions.

10. Adjust the **fuel** valve in a clockwise direction until a peak reading is obtained.

    NOTE: There is a time delay between adjusting the flow of fuel and seeing the effect of the adjustment. A pause of a few seconds is therefore necessary between making every fine adjustment.

    The optimum flame conditions are different for Na and K and retuning is necessary when switching between elements.

11. For optimum performance the instrument should be allowed 15 minutes to warm-up. During this warm-up period a blank deionised water sample should be aspirated. It should be noted that results, adequate for most purposes, can be obtained from switch on, although standardisation settings will need frequent checking during the warm-up period.

4.3 Calibration: PFP7

It is important to understand that the principles of flame photometry are such that, over **certain concentration ranges**, light emitted from the flame is **directly** proportional to the concentration of the species being aspirated.

The graph below shows that the direct relationship between the flame emission and concentration is only true at relatively low concentrations. Above these low levels the flame begins to saturate and the flame emission ceases to increase in a linear relationship to concentration.

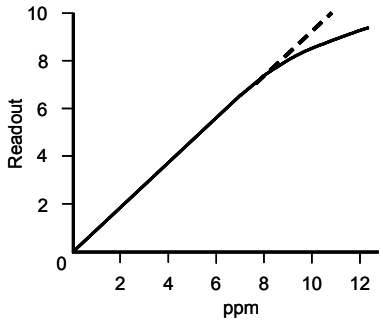

Figure 4.3.1: Relationship between sample concentration and flame emission.

If the samples being analysed lie on the linear part of the curve then the user can take direct concentration readings from the digital display. If, however, the concentration of samples are above the levels shown on the graph then the user has to dilute the samples so that they lie on the linear part of the curve.

The user can manually construct a calibration curve using standard solutions containing known concentrations of the elements to be determined and if necessary, other materials to ensure that the standard and sample backgrounds match. The concentration range covered by the calibration curve will depend upon the expected concentration of the samples so that the sample readings fall somewhere in the middle of the calibration curve.

Once the calibration curve has been plotted, the readings for the sample solutions are compared with the curve to allow the sample concentrations to be established.

It is important to realise that each element has its own characteristic curve and separate calibration curves must be constructed.

Instrument re-calibration is easily achieved by setting the blank solution to read zero and remeasuring the top standard. The graph in **Figure 4.3.2** shows a typical curve obtained when measuring in parts per million (ppm).

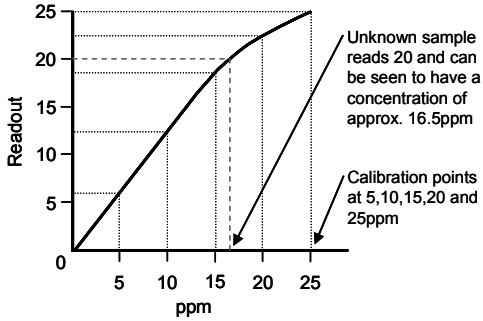

Figure 4.3.2: Typical calibration curve measuring ppm.

Customers working in medical environments are quite likely to be using the S.I. unit of mmol/l to report their results. The relationship between mmol/l and ppm is defined below:

Sodium	Na	1ppm = 0.0435mmol/l	1mmol/l = 23ppm
Potassium	K	1ppm = 0.0256mmol/l	1mmol/l = 39ppm
Lithium	Li	1ppm = 0.1441mmol/l	1mmol/l = 7ppm
Calcium	Ca	1ppm = 0.0250mmol/l	1mmol/l = 40ppm

This relationship means that Na and K samples in the normal clinical range of 136-145mmol/l Na and 3.5-5.0mmol/l K should be pre-diluted 1 in 100 or 1 in 200 to get optimum results from the flame photometer.

Aspirate a blank solution and set the readout to 000 using the **blank** control.

Aspirate the highest standard solution and set the readout to an appropriate reading using the **fine** and **coarse** sensitivity controls. Re-check the blank setting and adjust if necessary.

Aspirate the remaining standard solutions (if used) to construct the calibration curve and note the results.

When the blank and standards are set, unknown samples can be aspirated and the results noted directly from the instrument readout.

Calibration needs to be checked periodically by aspirating the blank and standard solutions. Initially this check should be carried out after every 10 samples. Experience and increased confidence in the PFP7 will enable you to best judge the frequency of this check.

The decimal point (**d.p.**) switch can be set to illuminate the decimal point in any significant position. This should be chosen to give sufficient resolution for the test required.

4.4 Calibration: PFP7/C

When using the PFP7/C, a calibration curve is not required as the display is calibrated in direct concentration units. Therefore only one top standard is required to enable this calibration to be performed.

Installation and set-up procedures should be carried out as for the standard Model PFP7.

NOTE: The Model PFP7/C allows direct readout of Na and K concentration in serum samples. Na levels in urine samples may also be read directly from the display.

Samples of both serum and urine should be diluted 1 in 100 or 1 in 200 to obtain optimum results from the flame photometer.

To calibrate the unit for clinical use the following steps should be carried out:

1. Aspirate deionised water and set the display to read zero.
2. Select the appropriate element (Na or K) on the **filter select** control and the position of the decimal point using the **d.p.** switch.
3. Aspirate the required standard, e.g. 140mmol/l Na, 5.0mmol/l K which has been pre-diluted at least 1 in 100 and set the display reading accordingly using the **fine** and **coarse** sensitivity controls.
4. Adjust the **fuel** valve in a clockwise direction until a peak reading is obtained. Re-set the display reading accordingly for the standard being aspirated.

   NOTE: There is a time delay between adjusting the flow of fuel and seeing the effect of the adjustment. A pause of a few seconds is therefore necessary between making every fine adjustment.

   The optimum flame conditions are different for Na and K and retuning is necessary when switching between elements.

5. Re-check the zero setting and adjust if necessary.
6. Aspirate the pre-diluted sample and note the reading.
7. Calibration needs to be checked periodically by aspirating the blank and standard solutions. Initially this check should be carried out after every 10 samples. Experience and increased confidence in the PFP7/C will enable you to best judge the frequency of this check.

4.5 Shutdown

1. Aspirate deionised water for at least ten minutes.
2. If the shutdown is short term i.e. the instrument is to be used again the same day/shift, it is adequate to remove electrical power from the unit by depressing the **power** switch. This will safely extinguish the flame.

3. If the shutdown is longer term or if the laboratory is likely to be left unattended during the shutdown, then the fuel supply should be turned off at source; wait for the **FLM** indicator to extinguish and then turn off the power. This ensures that there is no gas left in the tubing to the unit.

4.6 Operating precautions

1. The fuel gases used in the flame photometers are inflammable and therefore potentially hazardous. Cylinders of fuel gas should always be stored and used in line with the supplier's recommendation.

2. It is possible that a small quantity of fuel will escape from the instrument during the ignition sequence. The amount of fuel is harmless although may smell slightly. If the smell of fuel gas persists the instrument should be immediately shut down and the source of the leakage determined by using a soap solution on the hose joints.

3. Do not leave the instrument running unattended while the flame is alight.

4. The top of the instrument chimney unit becomes very hot when running and can cause severe burns if touched.

5. The exhaust gases from the flame are very hot and the area approximately 1 metre above the chimney must be avoided. Never attempt to look down the chimney whilst the flame is running. Always use the inspection window.

6. The instrument uses potentially hazardous electrical supplies. Never remove covers from the instrument without first ensuring that it has been isolated completely from the AC mains supply.

7. If the instrument is used in a pathology laboratory, all samples should be handled with the caution normally accorded to those known to contain pathogenic organisms. Care should also be taken when undertaking maintenance on instruments that have been used in these environments. A bactericidal agent should be used when cleaning parts during routine maintenance.

For detailed safety precautions please refer to the beginning of the manual, page 1 onwards.

Section 5

Accessories

5.1 Water separator

To avoid unstable readings it is essential that the air supply to the mixing chamber is clean and dry. Jenway recommends that a water separator be used with all flame photometers as when air is compressed, condensation occurs. The amount of condensation will depend on the humidity in the air, so in high humidity areas, water separators are essential. The water separator fits on the air-line between the compressor and the flame photometer. This is where condensation forms. Any water collecting in the tube will cause unstable readings and if it enters the instrument, will lead to the eventual corrosion of internal components in the air-line.

5.1.1 Features

1. Available in two sizes: large (normally recommended) (part code **500 177**) or small (for areas of low humidity) (part code **500 176**).
2. Complete with all parts to connect to the flame photometer.
3. Provides optimum performance in minimum space.
4. Provides effective liquid and solid separation.
5. No maintenance required.
6. Finger operated plungers for easy draining.

5.1.2 Specifications

Model	Large	Small
Part code	500 177	500 176
Port size:	¼”, ⅜”	⅛”, ¼”
Maximum operating pressure:	100psi	100psi
Working temperature range:	-5 to 80°C (with no freezing)	-5 to 80°C (with no freezing)
Nominal filtration rating:	5µm	5µm
Bowl material:	Polycarbonate	Polycarbonate
Bowl guard:	Yes	No
Drain capacity (ml):	25	8
Weight (kg):	0.22	0.18

5.2 Compressor

The compressor is a reliable, quiet air compressor of oil-less design requiring minimal maintenance. The compressor is constructed from a lightweight but rigid aluminium extrusion and is housed in a protective case to ensure maximum user safety and convenience. Load bearings are permanently lubricated and sealed for the life of the compressor. A PTFE composition cup offers excellent sealing and wear properties. The integral motor has its own cooling fan and is thermally protected against overload.

5.2.1 Specification

The compressor gives a supply of dry, clean and pulse free air at a pressure between 15 and 30 psi (approximately 1-2 kg/cm^2) at 6 litres/minute. There are two models available depending on the required voltage.

Model	**8515**	**8516**
Part Code	535 001	535 002
Voltage:	230V, 50/60Hz	110V, 60Hz

5.2.2 Installation

The compressor should be positioned on a stable flat surface within 2 meters of the PFP7 or PFP7/C. Connection to the PFP7 or PFP7/C should be carried out as follows:

1. Ensure the power supply to the flame photometer is switched on.

2. Connect the air tubing (supplied with the flame photometer) to the compressor outlet nozzle and secure with a hose clip.

3. Connect the other end of the air tubing to the air inlet located.

4. Plug the compressor mains lead into either auxiliary power socket located on the rear of the panel of the flame photometer or directly into the mains power supply.

Section 6

Maintenance

6.1 General

The design of the Model PFP7 & PFP7/C is such that maintenance requirements are minimal. To maintain good performance and prolong the life of the instrument it is important that the procedures defined in the manual are carried out regularly. The performance of the instrument depends upon an adequate supply of compressed air. Recommended compressor maintenance procedures should be carried out to ensure that compressor performance does not deteriorate.

6.2 Weekly maintenance

The nebuliser should be cleaned weekly to ensure efficient nebuliser operation.

Equipment required: 10ml graduated measuring cylinder
Stop watch
Cleaning wire (I/500 194)

1. Switch on the air supply to the flame photometer but do not light the flame.
2. Fill the measuring cylinder with deionised water and present to the nebuliser inlet tube for one minute.
3. The consumption rate should be between 2 and 6ml/min. If correct, no further action is required.
4. If the consumption rate is too low, this is likely to be caused by a blockage in the fine capillary tubes and can usually be cleared by passing the cleaning wire through the nebuliser. If, after taking this action and re-checking the consumption rate it is still too low, then the inlet tube should be discarded and the test repeated using fresh tubing.
5. If the nebuliser operation is still unsatisfactory, remove the nebuliser from the mixing chamber, disconnect from the air line, remove the inlet tubing and soak the nebuliser in hot deionised water.
6. Dry the nebuliser before refitting and repeating the test.
7. If operation is still unsatisfactory, a new nebuliser should be fitted.

NOTE: Under no circumstances should the nebuliser be adjusted.

6.3 Monthly maintenance

Equipment required: 10ml graduated measuring cylinder
Stop watch
Cleaning wire (I/500 194)
Cleaning solution (025 171)

1. Carry out the **Weekly maintenance** schedule.

2. With the flame alight aspirate a 1 in 100 diluted sample of cleaning solution for 30 minutes, followed by deionised water for a further 30 minutes.

6.4 Six-monthly maintenance

Burner cleaning.

Equipment required: 10ml graduated measuring cylinder
Stop watch
Cleaning wire (I/500 194)
Cleaning solution (025 171)
Small, stiff brush

1. Carry out the **Weekly maintenance** schedule.

2. If the instrument has been running with the flame alight, allow 30 minutes for the burner system to cool down.

3. Disconnect the mixing chamber from the chimney unit by unscrewing the knurled locking ring and dropping the chamber clear of the chimney.

4. Remove the fluted burner from the top of the burner tube.

5. Rinse the burner in deionised water and remove any deposits or encrustations by brushing with a small stiff brush. If deposits are persistent, heating or boiling the deionised water will help.

6. Dry and replace the burner, pointed end downwards and re-assemble the mixing chamber onto the chimney.

7. Carry out the flushing procedure as described in **Monthly maintenance**.

Section 7

Trouble shooting

7.1 General

This section is a step-by step guide that should allow an operator to take appropriate actions to clear simple faults. Any action not defined in this trouble shooting guide should only be undertaken by qualified personnel.

7.2 Unstable results

Possible cause	Solution
Condensation in the air supply.	Drain the tubing. If the problem persists a moisture-free air supply should be arranged by using a water separator.
Nebuliser blocked.	Check the nebuliser performance as defined in Section 6.2, Weekly maintenance.
Flame temperature not correctly set.	Ensure that the **fuel** valve is correctly set for the element being determined; refer to Section 4.2, Operation.
Fuel cylinder nearly empty.	Replace cylinder with a fully charged one.
Instrument in strong draught.	Relocate the instrument.
Instrument in very bright sunlight.	Relocate the instrument.
Instrument not draining correctly.	Ensure the “U” tube is clear of blockages and that the drain trap is at the correct level i.e. pushed down fully so the rim at the top is resting on the clip.
Atmosphere contaminated.	Remove source of contamination or improve ventilation.
Mixing chamber/burner contaminated.	Carry out the six-monthly maintenance procedures as defined in section 6.4 Ensure the instrument is always flushed with deionised water before shutdown.

7.3 Unable to set standard reading

Possible cause	Solution
Calibration standard at incorrect concentration or incorrectly diluted.	Make new standards to check the calibration procedure.
Blank calibration standard contaminated or incorrectly set.	Re-make standard and re-set blank.

Nebuliser blocked.	Check the nebuliser performance as defined in Section 6.2, Weekly maintenance.
Flame temperature not correctly set.	Ensure the **fuel** valve is correctly set for the element being determined, refer to Section 4.2.

7.4 Non-linear results

Possible cause	Solution
Nebuliser blocked.	Check the nebuliser performance as defined in Section 6.2, Weekly maintenance.
Contaminated deionised water.	Make up new standards in fresh water.
Incorrect dilution or incorrect calibration standard used.	Prepare fresh dilutions of the calibration standard.
Flame temperature not correctly set.	Ensure the **fuel** valve is correctly set for the element being determined, refer to Section 4.2.
Instrument not draining adequately.	Ensure the “U” tube is clear of blockages and that the drain trap is at the correct level.

7.5 Flame will not light

Possible cause	Solution
Drain “U” tube empty.	Fill with deionised water.
Fuel cylinder empty or regulator pressures incorrectly set.	Replace cylinder or reset regulator.
Inadequate air supply.	Check air connection to the rear panel and the operation of the compressor.
Propane/butane fuel restrictor blocked.	Carefully “blow out” the restrictor. Do not use wire to clear the blockage as this will result in damage to the restrictor.

7.6 No electrical power

Possible cause	Solution
AC supply not fully engaged.	Check the power lead is correctly inserted.
AC supply not available.	Check mains supply.

7.7 Unable to set blank

Possible cause	Solution
Blank contaminated.	Re-make the blank and re-check.
Burner encrusted with salt.	Clean the burner as defined in Section 6.4, Six monthly maintenance. Ensure that the cleaning procedure is carried out more frequently.

7.8 No reading on display

Possible cause	Solution
Incorrect filter selected.	Select correct filter.
Calibration standard incorrectly made.	Re-make standard.
Nebuliser completely blocked.	Check the nebuliser performance as defined in Section 6.2, Weekly maintenance.

Section 8

Spares

8.1 Minor Spares Kit (PFP7/MINKIT)

Description	Part code	Quantity
Nebuliser	500019	1
Cleaning Wire (3x150mm)	I/500194	1
Cleaning Solution	025016	2
Ignition Probe Assembly	PFP7/IPA	1
Mk2 Small Knob (Blank & Fine) Assembly	PFP7/SKB	1
Mk2 Large Knob (d.p., Coarse & Filter Select) Assembly	PFP7/LKB	1
Mk2 Fuel Knob Assembly	PFP7/FKB	1
Fuse Kit	PFP7/FKIT	1
Drain Trap Kit	500551	1
Ignition Switch	017025	1
Power Switch	017050	1
Nebuliser to Solution Tube	I/500193	500mm
Air Regulator to Nebuliser Tube	023009	500mm
Air Regulator to Nebuliser Tube (Plastic Olive)	026023	1
Air Regulator to Nebuliser Tube (Brass Nut)	026007	1
Air Regulator to Nebuliser Tube (Coupling to Air Regulator)	026024	1
Allen Key	060196	1
Foot Assembly	PFP7/FA	1

This product meets the applicable EC harmonised standards for radio frequency interference and may be expected not to interfere with, or be affected by, other equipment with similar qualifications. We cannot be sure that other equipment used in its vicinity will meet these standards and so we cannot guarantee that interference will not occur in practice. Where there is a possibility that injury, damage or loss might occur if equipment malfunctions due to radio frequency interference, or for general advice before use, contact the manufacturer.

JENWAY

Cole-Parmer®

EU Declaration of Conformity

Product	Laboratory Equipment	**File Number**	P225
Manufacturer	Cole-Parmer Ltd Beacon Road Stone, Staffordshire ST15 0SA United Kingdom		

This declaration of conformity is issued under the sole responsibility of the manufacturer

Object of Declaration Flame Photometer Range
(reference the attached list of catalogue numbers)

The object of the declaration described above is in conformity with the relevant Union Harmonisation Legislation:

Low Voltage Directive	2006/95/EC
EMC Directive	2004/108/EC
RoHS Directive	2011/65/EC

References to the relevant harmonised standards used or references to the other technical specifications in relation to which conformity is declared:

IEC/EN 61010-1:2001	Safety requirements for electrical equipment for measurement, control and laboratory use. Part 1: General requirements.
IEC/EN 61010-2-010:2003	Particular requirements for laboratory equipment for the heating of materials.
IEC/EN 61326-1:2006	Electrical equipment for measurement, control and laboratory use. EMC requirements. Part 1: General requirements (Class A).

Signed for and on behalf of the above manufacturer

Additional Information	Year of CE Marking: 1996
Place of Issue	Stone, Staffordshire, UK
Date of Issue	October 2009
Authorised Representative	Carl Warren
Title	Technical Manager
Signature	

Declaration of Conformity is also available to view online at www.jenway.com

Thank you for reading this data sheet.

For pricing or for further information, please contact us at our UK Office, using the details below.

UK Office
Keison Products,
P.O. Box 2124, Chelmsford, Essex, CM1 3UP, England.
Tel: +44 (0)330 088 0560
Fax: +44 (0)1245 808399
Email: sales@keison.co.uk

Please note - Product designs and specifications are subject to change without notice. The user is responsible for determining the suitability of this product.