CP-6 (T)

ISO 9001 CERTIFIED

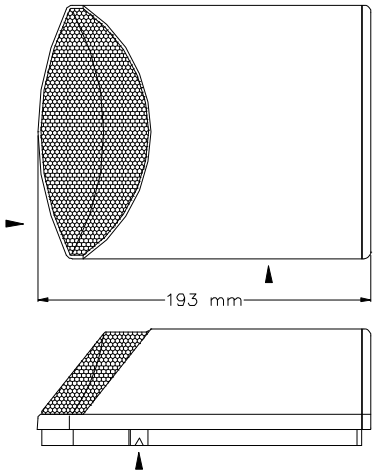

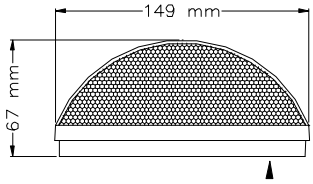

Cable entries

CIRCUIT DIAGRAM

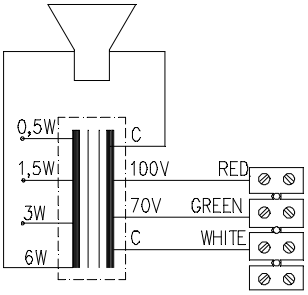

70/100 volt combined transformer Primary connections	
White : Green	70 V
White : Red	100 V

Secondary nominal tappings	
C : 1	6,0 W
C : 2	3,0 W
C : 3	1,5 W
C : 4	0,5 W

Sound pressure levels at 1W/1m Sine wave

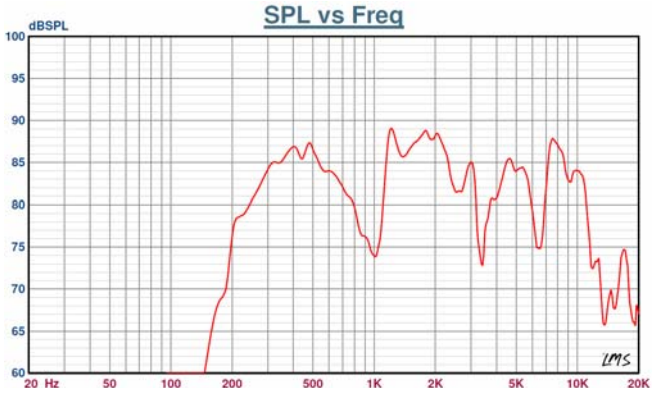

Specifications	
Material / Color	ABS / RAL 9010
Mounting	3 Screws
Termination	Internal screw connections
Weight w/transformer	0,6 kg
IP-rating	
Max. / min. amb. temp	90°C / -20°C
Rated / max. power	6 W / 10 W
SPL 1W/1m	86 dB
SPL rated power	94 dB
Effective freq. range	170 – 18000 Hz
Dispersion (-6dB) 1kHz / 4kHz	180° / 110°
Directivity factor, Q(2kHz)	
Options	Impedance, colors, labels

Installation, Operation and Maintenance Procedures

- To open the loudspeaker, press the two clips on each side of the loudspeaker and separate the cabinet from the chassis.
- Enter the cable through a suitable cable entrance.
- Fasten the chassis to the wall or roof with 3 screws.
- Clip the cabinet on to the chassis after termination.
- For optimum performance, always use the correct voltage / power and operate within the frequency limits as stated.
- Do not open the loudspeaker when energized.
- This loudspeaker is supplied with a 2 year warranty against defective workmanship.

CE

DNH reserves the right to alter specifications without notice

Thank you for reading this data sheet.

For pricing or for further information, please contact us at our UK Office, using the details below.

UK Office
Keison Products,
P.O. Box 2124, Chelmsford, Essex, CM1 3UP, England.
Tel: +44 (0)330 088 0560
Fax: +44 (0)1245 808399
Email: sales@keison.co.uk

Please note - Product designs and specifications are subject to change without notice. The user is responsible for determining the suitability of this product.