6. FAULT FINDING

The following table provides a list of possible faults related to the sensor together with possible causes and remedies.

Fault	Cause/Remedy
Sensor reads non zero all the time	Gas could be present, ensure there is no combustible gas in the atmosphere.
Sensor reads non zero when no gas is present	Adjust the control system zero setting.
Sensor reads low when gas is applied	Adjust the control system span setting.
Sensor reads high when gas is applied	Adjust the control system span setting.
Sensor reads zero when gas is applied	1. Check the wiring. 2. Check that the protective disc has been removed from the filter housing. 3. Check that the filter is not dirty/obstructed. 4. Replace the sensor if poisoning is suspected.

7. CERTIFICATION

The following BASEEFA certification information is imprinted on adjacent faces in two separate blocks on the hexagonal part of the sensor body.

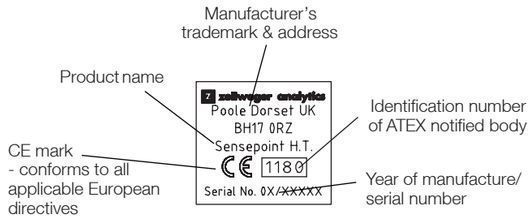

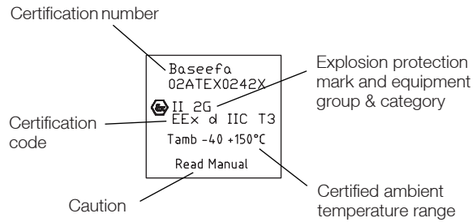

8. SPECIFICATIONS

Dimensions:	See diagram in Installation section.
Operating temperature range:	-40°C to +150°C.
Operating humidity range:	20% to 90% RH continuous. 10% to 99% RH intermittent - non condensing.
Operating pressure range:	75 to 110 k Pa.
Warm up time:	Less than 10 minutes.
Voltage range:	2.9 V to 3.5 V bridge (at 200mA).
Power consumption:	700mW.
Signal output:	mV bridge.
Calibration flow rate:	Recommended between 1 and 1.5 l/min.
Poisoning:	The sensing elements may become inactive after extensive exposure to silicones, halogenated hydrocarbons, heavy metals or sulphur compounds.
Expected operating life:	5 years.
IP rating:	IP65 standard; IP66/67 with Weather Protection.
CE:	The sensor complies with relevant CE directives.
ATEX Certification:	Ex II 2G EEx d II C T3 Tamb -40°C to +150°C Baseefa02ATEX0242X

9. ACCESSORIES & SPARE PARTS

Description	Part Number
Complete replacement sensor:	
• M20 version	2106B2310
• M25 version	2106B2311
• 3/4 NPT version	2106B2312
Stainless steel filter	00780-F-0018
Filter Housing	00780-C-0038
High Temperature Junction Box	2052D0001
High Temperature Weather Protection	00780-A-0076

Quick Start Guide

Honeywell

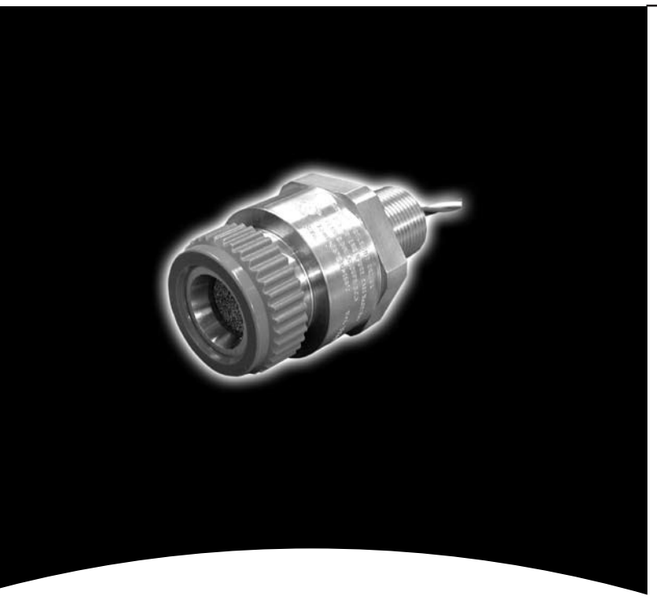

Sensepoint HT
Combustible Gas Sensor

1. INTRODUCTION

The Sensepoint High Temperature (HT) Combustible Gas Sensor is a sealed disposable sensor for the detection of flammable gases. It must be fitted into a suitably approved Exe or Exd high temperature junction box (e.g. Feel Flameproof Enclosures) fitted with an approved cable gland for external wiring (e.g. Peppers Cable Glands, Series A3LF or CR3 CROLOCK Series).

The sensor features a Filter Housing that retains a stainless steel mesh filter. It employs a catalytic pellistor sensor device which is used as part of a bridge measuring circuit.

Sensepoint HT is certified for hazardous areas to EN50014/EN50018 and is protected against water and dust ingress to IP66/67. The sensor is available in M20, M25 and 3/4 NPT thread versions. The sensor accepts accessories from a specified range (see **Accessories & Spare Parts**).

Information notices

The types of information notices used throughout this handbook are as follows:

WARNINGS

Indicates hazardous or unsafe practice that could result in severe injury or death to personnel.

Caution: **Indicates hazardous or unsafe practice which could result in minor injury to personnel, or product or property damage.**

Note *Provides useful/helpful/additional information.*

If more information outside the scope of this technical handbook is required please contact Honeywell Analytics.

Associated Documents

Sensepoint Gas Sensors Technical Handbook Part No: 2106M0502

2. SAFETY

WARNINGS

1. This unit is intended for use at a normal, or reduced, levels of atmospheric oxygen and pressure only, i.e. less than 21% oxygen and less than 1.1 bar. Oxygen deficient atmospheres (less than 10%V/V) may suppress the sensor output.
2. Refer to local or national regulations relative to installation at the site. For Europe see EN50073 and EN60079-14.
3. Operators should be fully aware of the action to be taken if the gas concentration exceeds the alarm level.
4. Installation should consider not only the best placing for gas leakage related to potential leak points, gas characteristics and ventilation, but also where the potential of mechanical damage is minimized or avoided.
5. Only assessed for ATEX for ignition hazards.

CAUTIONS

1. Atmospheres above 100% LEL may suppress the sensor reading.
2. Do not modify or alter the sensor construction as essential safety requirements may be invalidated.
3. Install using suitably approved and certified Exe or Exd high temperature junction box, connectors and glands.
4. Dispose of in accordance with local disposal regulations.
   Materials used - Stainless Steel.

3. INSTALLATION

The Sensepoint HT Combustible Gas Sensor must be fitted into a suitably approved Exe or Exd high temperature junction box fitted with an approved cable gland for external wiring. The sensor requires a 200mA current supply, nominal 3V, derived from a suitable control card.

Only a qualified installation engineer should install the sensor.

Install the sensor in a location free from direct heat sources and fit it so that it either points downwards or horizontally. It is not recommended that the sensor points upwards. See the Sensepoint Gas Sensors Technical Handbook for installation in forced air conditions.

1. **Isolate all associated power supplies and ensure that they remain OFF during the installation procedure. Ensure a gas free atmosphere.**
2. **Install the high temperature junction box.**

   See the manufacturer's instructions.
3. **Remove the junction box lid.**
4. **Fit the Sensepoint HT sensor to the junction box.**

   Ensure that the junction box thread and the sensor thread are compatible. Push the sensor wires through the cable entry in the junction box and screw the sensor body firmly home into the entry. Lock the sensor in place with a suitable lock-nut.
5. **Connect the sensor wiring to the junction box terminal strip.**

   See the subsequent wiring diagram. Use multicore cable, three wire minimum, of conductor size 2.5mm² max.
6. **Fit a suitable gland to the box, secure the control system cable and connect the field wiring to the terminal strip.**

   See the subsequent wiring diagram.
7. **Refit the junction box lid.**
8. **Unscrew the filter housing from the sensor body and remove the filter from the filter housing.**

   Discard the filter housing with protective disc. The filter housing material cannot withstand high temperatures.

INSTALLATION

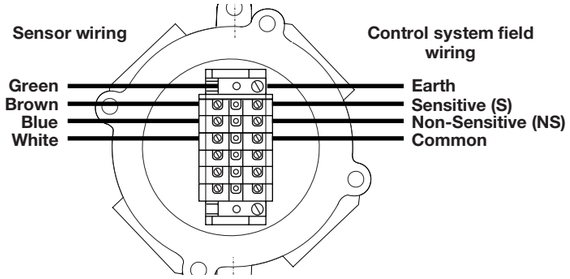

Note: In addition to the sensor's integral earth conductor, earth equipotential bonding may be maintained via the sensor rear mounting thread if required.

9. **If the sensor is installed:**
   - **indoors - discard the filter.**
   - **outdoors - fit the previously removed filter (if required) to the High Temperature Weather Protection accessory (Part No: 00780-A-0076) and fit the accessory to the sensor.**

     Fit the seal supplied with the Weather Protection accessory to the sensor body. Screw the accessory firmly onto the sensor until it seats against the sensor body hexagon.

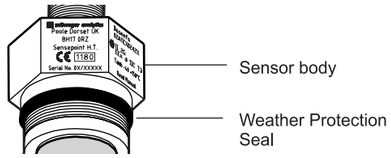

10. **Power-up the system and check for correct operation.**

INSTALLATION

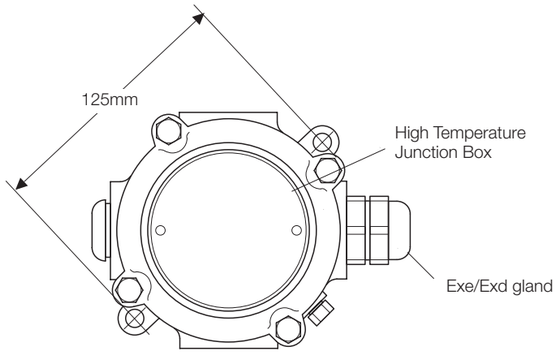

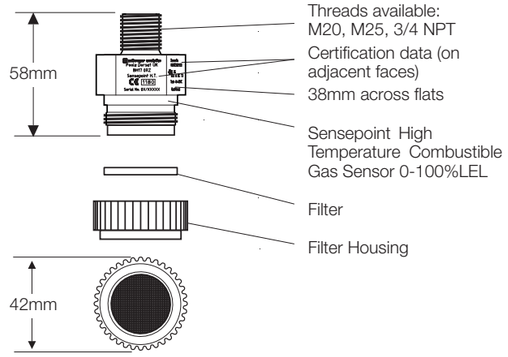

4. CALIBRATION

Sensors should be calibrated at concentrations representative of those to be measured. It is always recommended that Sensepoint HT is calibrated with the target gas it is to detect. If this is not possible, then cross calibration can be used.

For calibration in fast flow conditions see the Sensepoint Gas Sensors Technical Handbook.

Prior to calibration, allow the sensor to warm up for approximately 10 minutes. Re-calibration should only be attempted by qualified service personnel.

1. **Zero the control system with no gas present on the sensor.**

   If combustible gas is suspected to be in the vicinity of Sensepoint HT flow clean air over the sensor using a flow housing (see below).
2. **Fit a flow housing and connect a cylinder of either air, for a zero, or a known concentration of gas in air, at approximately the alarm point (e.g. 50% LEL), to the flow housing.**
3. **Pass the gas through the flow housing at a flow rate of approximately 1 litre to 1.5 litre/min.**
4. **Allow the sensor to stabilise.**
5. **When gassing with air, adjust the control card to indicate zero.**
6. **For span, the control card should be adjusted to indicate the concentration of the target gas being applied.**

   Remove the flow housing and the gas supply.

Cross Calibration Procedure

When calibrating the Sensepoint HT sensor with a gas which is different to the gas/vapour to be detected, the following cross calibration procedure should be followed.

Table 1 lists gases according to the reaction they produce at the detector. An eight star (8*) gas produces the highest output while a one star (1*) gas produces the lowest output. (These are not applicable at ppm levels.)

CALIBRATION

To calibrate the Sensepoint HT sensor carry out the following procedure:

1. **Obtain the star rating for both the test gas and the gas to be detected from Table 1 .**
2. **Use the values in Table 2 to obtain the required meter setting when a 50% LEL test gas is applied to the detector.**

   If a sensor is to be used to detect a gas other than that for which it was calibrated, the required correction factor may be obtained from **Table 3**. *The meter reading should be multiplied by this number in order to obtain the true gas concentration.*

Important Notes:

1. *Since combustible sensors require oxygen for correct operation, a mixture of gas in air should be used for calibration purposes.*
2. *Assuming an average sensor performance, the sensitivity information in* **Tables 1** *to* **3** *is normally accurate to ± 20%.*

Table 1 Star Rating of Gases

Gas	Star Rating	Gas	Star Rating
Acetone	4*	Hexane	3*
Ammonia	7*	Hydrogen	6*
Benzene	3*	Methane	6*
Butane	4*	Octane	3*
Diethyl ether	4*	Propan-2-ol	4*
Ethane	6*	Propane	5*
Ethanol	5*	Styrene	2*
Ethyl acetate	3*	Tetra hydrafuran	4*
Ethylene	5*	Xylene	2*

CALIBRATION

Table 2 Meter Settings

* Calibration Gas	* Rating of Gas to be Detected							
	8*	**7***	**6***	**5***	**4***	**3***	**2***	**1***
8*	50	62	76	95	-	-	-	-
7*	40	50	61	76	96	-	-	-
6*	33	41	50	62	78	98	-	-
5*	26	33	40	50	63	79	100	-
4*	21	26	32	40	50	63	80	-
3*	-	21	26	32	40	50	64	81
2*	-	-	-	25	31	39	50	64
1*	-	-	-	-	25	31	39	50

Note: These settings must only be used with a calibration gas concentration of 50% LEL. All data at standard temperature and pressure.

Example

1. The target gas to be detected is **Butane**.
   The calibration gas available is **Methane** (50% LEL).
2. Look up the star rating for each gas from **Table 1**:
   Butane = 4* **Methane = 6***
3. Check the meter settings for 50% LEL calibration gas from **Table 2**.
   The reading is **78%**.
4. The control card should therefore be set to **78%**.
   This gives an accurate reading for Butane, using 50% LEL Methane as a calibration gas.

CALIBRATION

Table 3 Meter Multiplication Factors

Unit calibrated to detect	Unit used to detect							
	8*	7*	6*	5*	4*	3*	2*	1*
8*	1.00	1.24	1.52	1.89	2.37	2.98	3.78	4.83
7*	0.81	1.00	1.23	1.53	1.92	2.40	3.05	3.90
6*	0.66	0.81	1.00	1.24	1.56	1.96	2.49	3.17
5*	0.53	0.66	0.80	1.00	1.25	1.58	2.00	2.55
4*	0.42	0.52	0.64	0.80	1.00	1.26	1.60	2.03
3*	0.34	0.42	0.51	0.64	0.80	1.00	1.27	1.62
2*	0.26	0.33	0.40	0.50	0.63	0.79	1.00	1.28
1*	0.21	0.26	0.32	0.39	0.49	0.62	0.78	1.00

5. MAINTENANCE

Only a qualified installation engineer should service the sensor. Ensure power is off before carrying out any maintenance procedures.

The only maintenance required is sensor replacement and filter changing (if fitted to an accessory). To replace the complete sensor refer to the Sensepoint Gas Sensors Technical Handbook. To replace the filter carry out the following procedure:

1. **Remove the High Temperature Weather Protection accessory.**
2. **Remove the old filter and replace with a fresh filter.**
3. **Replace the Weather Protection accessory.**

   Ensure the Weather Protection seal is in place. Screw the accessory firmly onto the sensor until it seats against the sensor body hexagon.

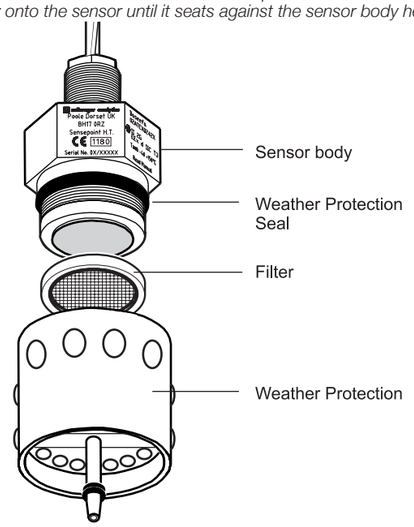

Thank you for reading this data sheet.

For pricing or for further information, please contact us at our UK Office, using the details below.

UK Office
Keison Products,
P.O. Box 2124, Chelmsford, Essex, CM1 3UP, England.
Tel: +44 (0)330 088 0560
Fax: +44 (0)1245 808399
Email: sales@keison.co.uk

Please note - Product designs and specifications are subject to change without notice. The user is responsible for determining the suitability of this product.